PFAFF

560/580
steam ironer

german engineering

Service Manual

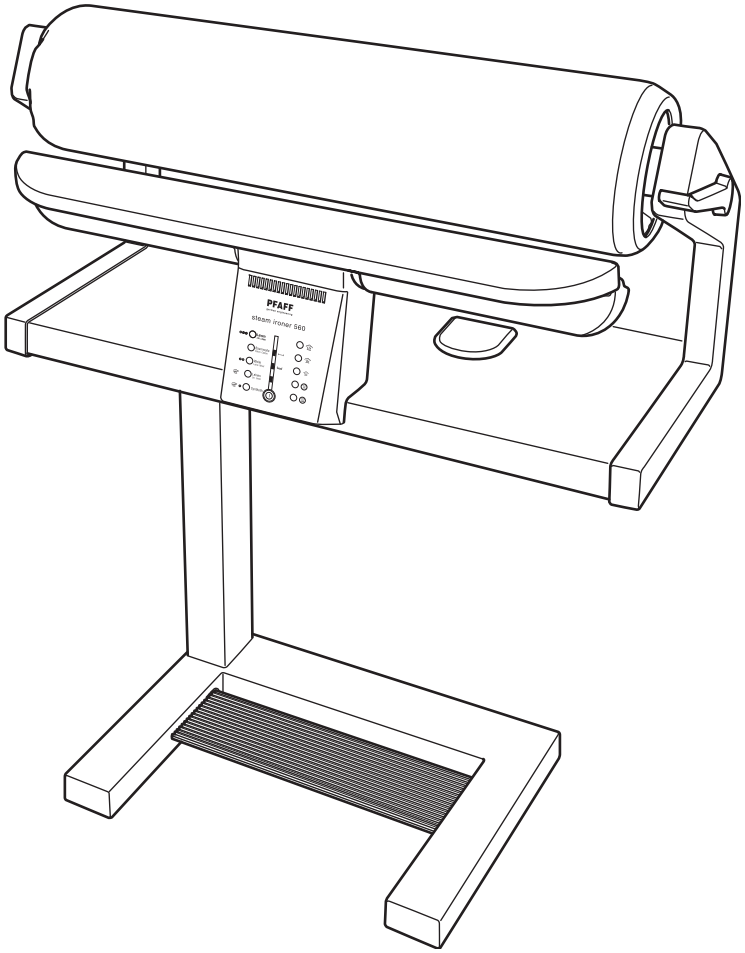

1st edition January 2005

Important:
If the steam ironer is repaired in a position other than the open or closed working position, the water tank must be emptied to prevent water from escaping from the filler hole.

Foreword

The purpose of this service manual is to assist you in quick and correct repair of the steam ironer.
Adjustments should only be made if the settings deviate from the requirements described herein.
When checking or adjusting the steam ironer, always proceed in the order of the worksteps prescribed.
For easier reference every workstep is marked with a dot.
The indications „left“, „right“, „top“, „bottom“, „front“ and „back“ always refer to the upright steam ironer with the controls facing the operator.
When assembling dismantled steam ironers, adjust the steam ironer to approximately the right settings.
This facilitates the subsequent fine adjustments.

When carrying out maintenance work on live parts or in their proximity, the steam ironer is to be separated from the power supply by unplugging the lead cord from the electrical socket.
An electrical safety test must be carried out after all repair work, even if the repair work is of a mechanical nature.
According to the German law on safe machine operation of June 24, 1958, VDE regulations are the recognized rules in the field of electrical engineering and form the basis for electrical safety tests of technical appliances.
The required electrical tests for the appliances are laid down in paragraph 4 of the regulations for repair, modification and testing of electrical appliances (VDE 0701, edition 09.2000).
It is obligatory to test our electrical appliances according to VDE 0701 following any repairs to our electrical appliances.
Outside Germany there are similar regulations in force, which are largely identical with the requirements of VDE 0701.

It is therefore necessary to consult a specialist when carrying out repairs on electrical appliances.

For the proper adjustment of the steam ironer, the following gauges and tools are required:

2.0 mm Allan key	07-433005-30/000
3.0 mm Allan key	07-433005-50/000
5.0 mm Allan key	07-433005-70/000
6.0 mm Allan key	07-433005-80/000
10.0 mm Allan key	07-433006-00/000
Screwdriver size 0.5 * 3.0 * 150	07-434001-60/000
Screwdriver size 1.0 * 6.0 * 100	07-434000-70/000
Philips screwdriver size 2	07-434001-20/000
13 mm socket wrench	07-433004-60/000
10 mm ring or open-ended wrench	07-433000-30/000
Pressing-out tool	92-325040-05/000
Torx screwdriver TX 6	07-434008-40/000
Torx screwdriver TX 8	07-434008-41/000
Torx screwdriver TX 10	07-434008-44/000
Torx screwdriver TX 15	07-434008-45/000

Notes on the steam ironer with regard to ambient conditions, treatment, cleaning and safety

Ambient conditions:

The recommended ranges are:

Ambient temperature	- 10° to 40°C (50° to 104°F)
Air humidity	20 % to 80 %

This steam ironer is a high-quality electro-mechanical device. It is designed for household purposes and should always be supervised when in use.
Make sure that it is not subjected to:
dust, severe dampness, direct sunlight, static electricity, heat-producing objects, corrosive chemicals or liquids.
The steam ironer must be used on a firm and even surface which is open for ventilation purposes.

Treatment:

Always protect the steam ironer from damage caused by hitting or dropping.

Cleaning:

Use a dry, clean, soft, lint free cloth to clean the steam ironer. To remove particularly persistent dirt, use a soft cloth with a neutral cleansing agent for plastic materials.
To clean the heating shoe use a standard cleanser for electric irons. Never scratch or scrape the surface of the heating shoe.

Important!
Do not use any insecticides or chemical products such as petrol (gas) or liquid chemicals to clean the steam ironer.

Safety:

1. The steam ironer must be put into operation according to the indications on the specification plate.
2. Do not place any objects in the openings on the steam ironer.
3. Do not use the steam ironer if:
   - there is visible damage,
   - Its function is defective,
   - it is wet, e.g. with condensation.
4. Do not pull the mains plug out of the socket by its cord.
5. If this appliance is used for another purpose than that intended or if it is wrongly operated, we cannot accept any liability for any damage caused.
6. To avoid the risk of electric shock, do not open the steam ironer.
   There are no parts inside the steam ironer that the user can repair.
   This is solely the responsibility of our qualified service staff.
7. Be sure to use only original PFAFF parts.

Please note:
The steam ironer 560/580 is equipped with a power-saving device, which automatically switches off the heating of the steam generator, if the pedal bar has not been operated for 8 minutes.
As soon as the pedal bar is operated again, the last settings of the steam ironer are restored.
If no LED lamp flashes, the ironer is ready for steaming again.

Specifications of the steam ironer 560 / 580

steam ironer	Unit of measure	560	580
Dimensions (working position)	W/D/H (cm)		94/40/105
Dimensions (working position)	W/D/H (cm)	76/40/100	
Dimensions (folded up)	W/D/H (cm)		52/40/100
Dimensions (folded up)	W/D/H (cm)	52/40(82	
Weight	(kg)	35,5	39
Working height (working surface)	(cm)	84,5	90
Roller length	(cm)	ca. 67	ca. 85
Heating shoe length	(cm)	65	82
Roller contact pressure	(N)	600	600
Spec. roller contact pressure	(N/cm²)	1,2	0,9
Ironing speed			
roller speed (variable)	rpm	2.40 to 6.80	2.40 to 6.80
feeding speed (variable speed)	m/min.	1,25 to 3,58	1,25 to 3,58
Temperature regulation			
1 temperature sensor for the steam generator		X	X
1 temperature sensor for the heating shoe		X	X
Electronically controlled steam generator		X	X
Electronically controlled ironing temperature		X	X
Excess temperature fuses			
1 fuse for the steam generator	(°C)	216	216
1 fuse for the heating shoe	(°C)	230	230
Heating shoe performance	(kW)	1,8	2,2
Steam generator performance	(kW)	1,0	1,0
Water tank capacity	(L)	1,3	1,3
steam level I output	(L/h)	0,9	0,9
steam level II output	(L/h)	1,1	1,1
steam level III output	(L/h)	1,3	1,3
Tap water (with antiliming agent) can be used		yes	yes
Distilled water (with or without antiliming agent) can be used		yes	yes
Motor power consumption	(W)	30	30
Mains voltage (50Hz)	(V)	220...230	220...230
Wattage	(kW)	2,9	2,9
Max. current consumption	A)	12,9	14,4
Maintenance		not required	not required
Emergency trigger in case of power loss		yes	yes
Power-saving device			
(switch-off time for the heating) (min.)	(min.)	8	8
Mark of conformity		CE / GS	CE / GS
Fuse (home installation) minimum	(A)	16	16

ESD

Warning!

It is of utmost importance to be careful to protect electronic parts from electrostatic discharge (ESD).

To prevent this from happening, circuit boards must be handled in a controlled way.

Always use strap 412 23 02-01 for maintenance work.

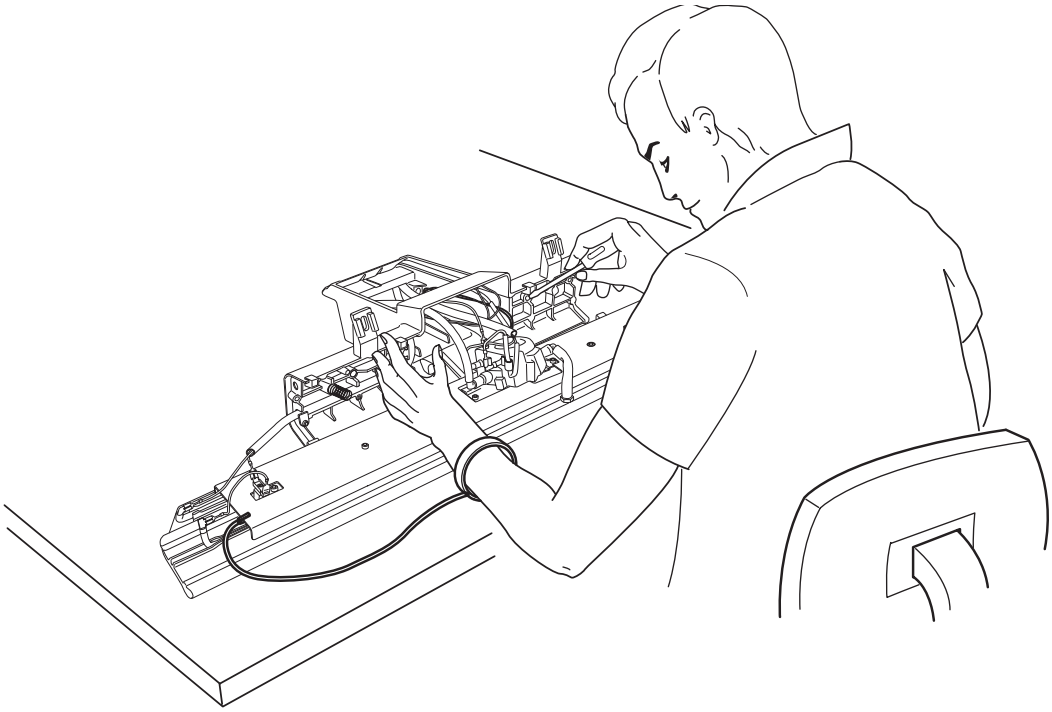

1. Removing the roller assembly

Please note:
If possible, it is recommended to unwrap the roller before removing it.
It will be easier to refit the roller without covering.

Wrapping/Unwrapping Program

- Set up the steam ironer in a working position.
- Plug the steam ironer into the mains supply.
- While pressing the „continuous steam“ key, switch on the steam ironer.
- The Wrapping Program is now activated and displayed (fig. 1).
- Operate the pedal bar and remove roller covering and padding.
- Press the „steam level 3“ key.
- Press the „steam level 1“ key.
- Operate the pedal bar. The roller assembly is lowered and stops. Release the pedal bar.
- Push lever 1 to the back. Loosen set screw in the lever and pull out the lever (fig. 1a).
- Press the „steam level 1“ key. The roller moves upwards.
- Terminate the program by switching off the steam ironer.
- Remove torx screws 2 to 5 from the arm covers.
- Remove arm covers.
- Switch on the steam ironer.
- Operate the pedal bar and bring crank in the position shown in fig. 1b.
- Switch off the steam ironer.
- Support lever bearing as shown in fig. 1b.
- Disconnect the steam ironer’s mains plug.
- Tilt the steam ironer over.
- Remove both screws 6 of the cover plate (fig. 1c).
- Remove cover plate.

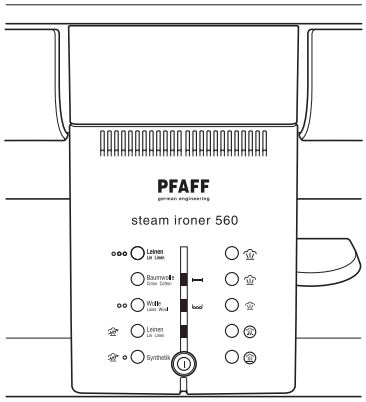

Fig. 1

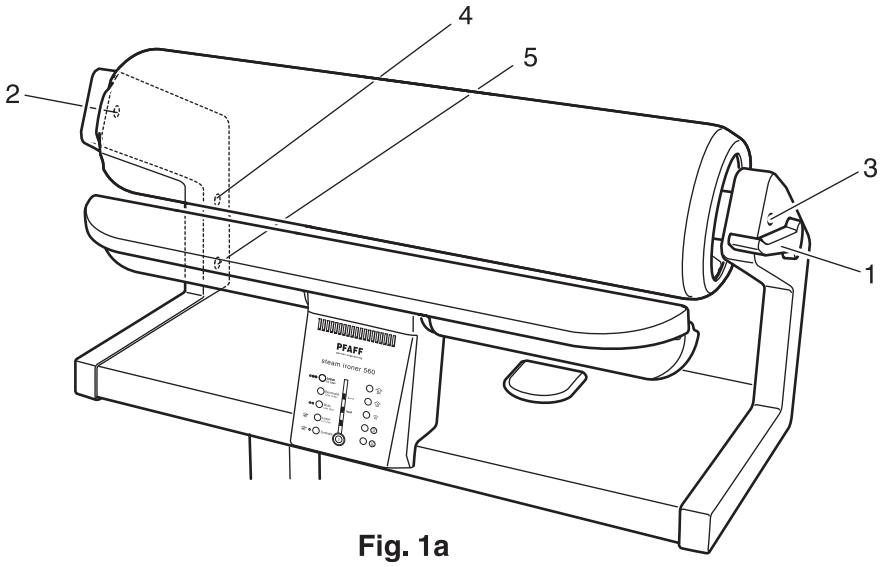

Fig. 1a

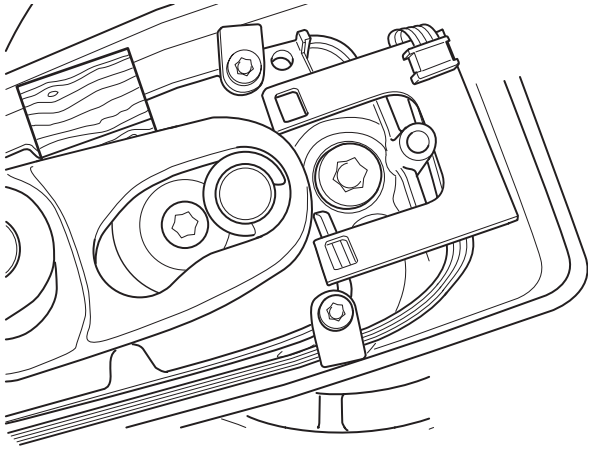

Fig. 1b

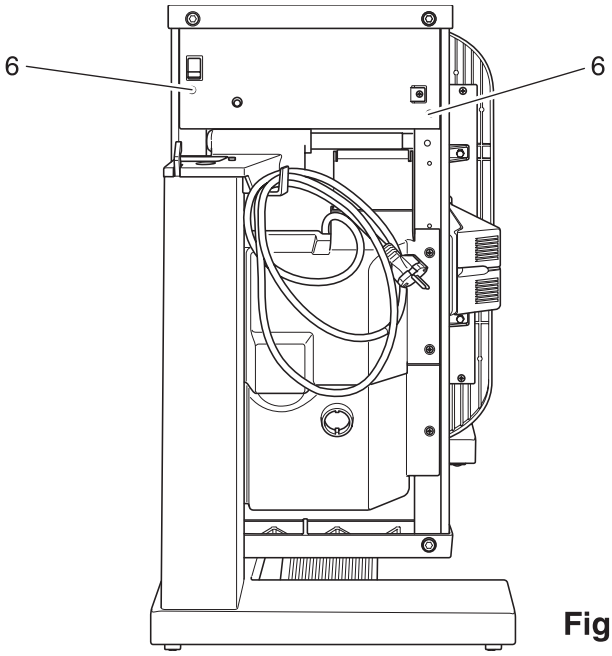

Fig. 1c

- Lift the catches 20 only 1-2 mm and disconnect plugs 7, 8, 9 (fig. 1d).
- Carefully remove wire branch 10 from the conduit (fig. 1e).
- Pull out connecting wire 11 from the circuit board.
- Remove screw 12 from the circuit board.
- Remove the circuit board.
- Set up the steam ironer in a working position.
- Fold the padding over four times and lay it on the heating shoe to prevent the latter from being damaged.
- Remove wire clamps 13 and pull wire branch 10 up and out.
- Remove retaining washer 14 and remove needle bearing 15 from the crank 16 (fig. 1f).
- Remove screw 17 from the crank.
- Using the pressing-out tool (special screw) remove the crank.
- Remove screws 18 at each end of the roller and carefully detach the roller.

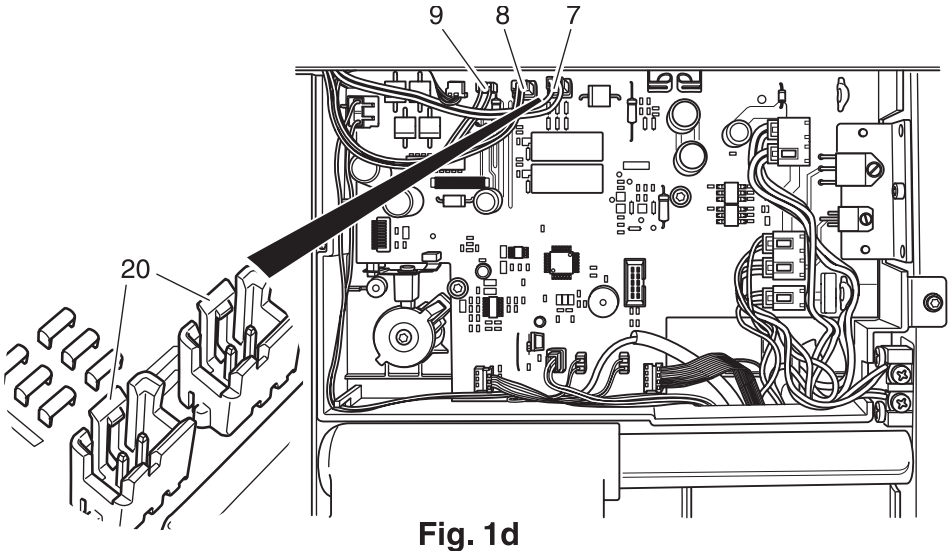

Fig. 1d

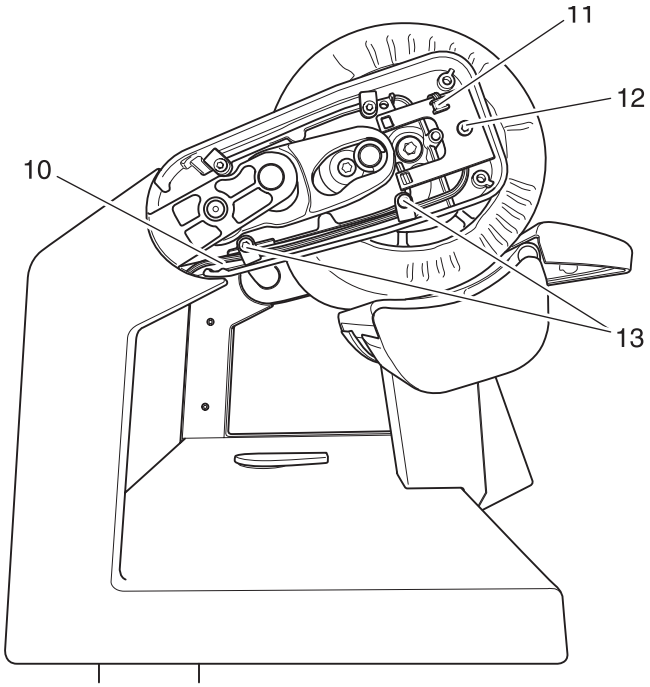

Fig. 1e

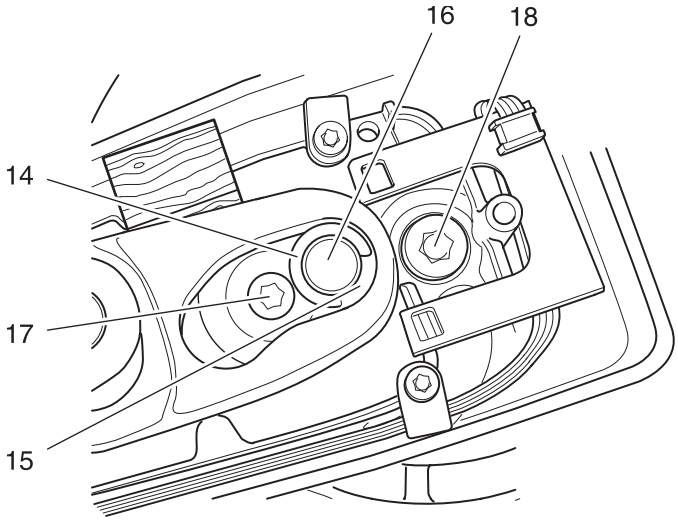

Fig. 1f

2. Replacing the raising/lowering unit

Please note:
After removing the roller it is possible to replace the following units, if necessary:

Raising/lowering unit
Rotating unit
Ventilator

Removing:

- Loosen screws 1 of the left and right roller holders (fig. 2).
- Remove both roller holders 2.
- Remove the driving units with the flanged pipe 3 (fig. 2a).
- Pull out connecting wire 4 from the raising/lowering unit 5.
- Remove screws 6 and take off the raising/lowering unit 5.

Refitting:

- Hold unit 5 close to the motor flange 7.
- Insert and tighten screws 6.
- Plug connecting wire 4 onto unit 5.
- Slightly loosen screw 20 of the motor flange 10 (fig. 3a).
- Insert driving units with flanged pipe 3 into the roller.
- While fitting driving units with flanged pipe 3, make sure that screw 20 is placed exactly under drill hole 21 (fig. 3).
- Mount both roller holders 2 and secure them with screws 1 (fig. 2).

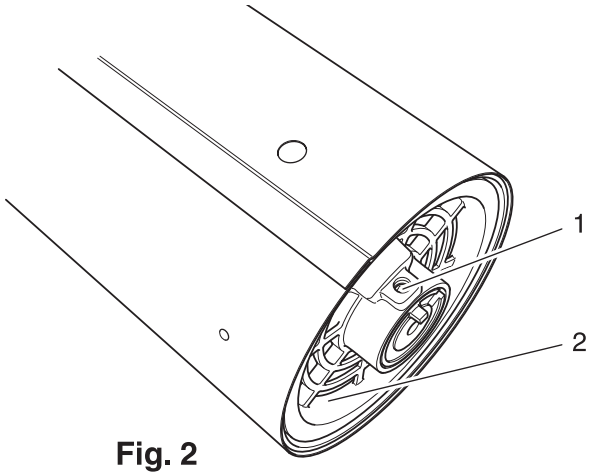

Fig. 2

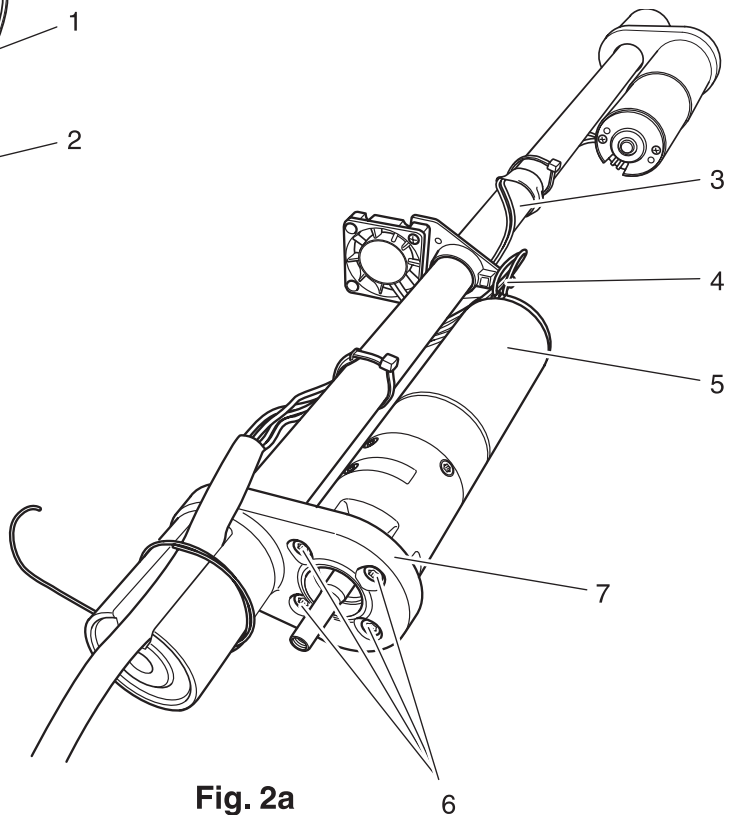

Fig. 2a

3. Replacing the rotating unit

Removing:

- Loosen screws 1 of the left and right roller holders (fig. 3).
- Remove both roller holders 2.
- Remove the driving units with the flanged pipe 3 (fig. 2a).
- Pull out connecting wire 4 from the rotating unit 9 (fig. 3a)
- Remove screw 20 and take off the rotating unit 5 with the motor flange 10.

Refitting:

- Place unit 9 with the motor flange 10 onto the flanged pipe.
- Insert and tighten screw 20.
- Plug connecting wire 8 onto unit 9.
- Insert driving units with flanged pipe 3 into the roller.
- ■ While fitting driving units with flanged pipe 3, make sure that screw 20 is placed exactly under drill hole 21 (fig. 3).
- Mount both roller holders 2 and secure them with screws 1.

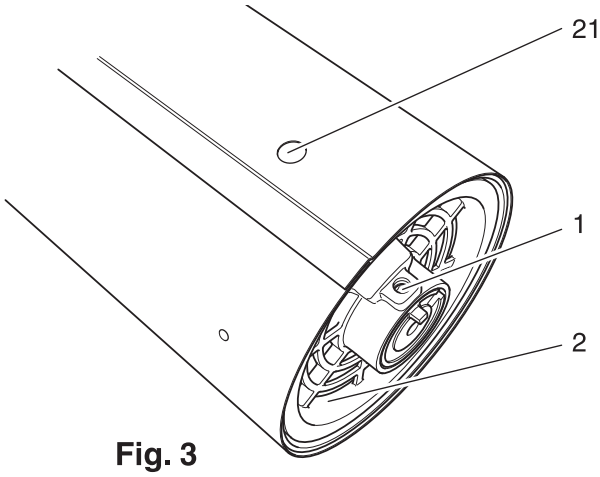

Fig. 3

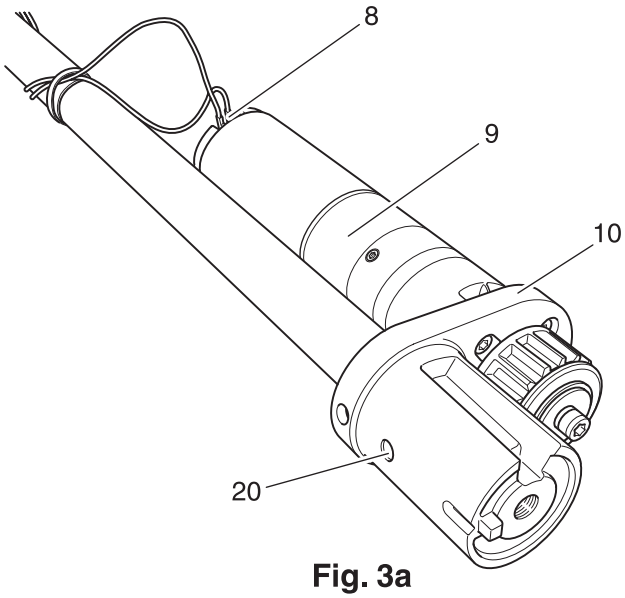

Fig. 3a

4. Replacing the ventilator

Removing:

- Loosen screws 1 of the left and right roller holders (fig. 4).
- Remove both roller holders 2.
- Remove the driving units with the flanged pipe 3 (fig. 4a).
- Pull out connecting wire 4 and 8 from the driving units 5 and 9.
- Remove cable bands 11 using cutting shears.
- Remove screws 12.
- Remove ventilator 13 with wire branch 14.

Refitting:

- By holding ventilator 13 close to the holder, insert and tighten screws 12.
- Run wire branch 14 as shown in fig. 4a.
- Fit cable bands 11.
- Plug connecting wires 4 and 8 onto driving units 5 and 9.
- Slightly loosen screw 20 of the motor flange 10 (fig. 4b).
- Fit driving units with flanged pipe 3 into the roller.
- ■ While fitting driving units with flanged pipe 3, make sure that screw 20 is placed exactly under drill hole 21 (fig. 4).
- Mount both roller holders 2 and secure them with screws 1.

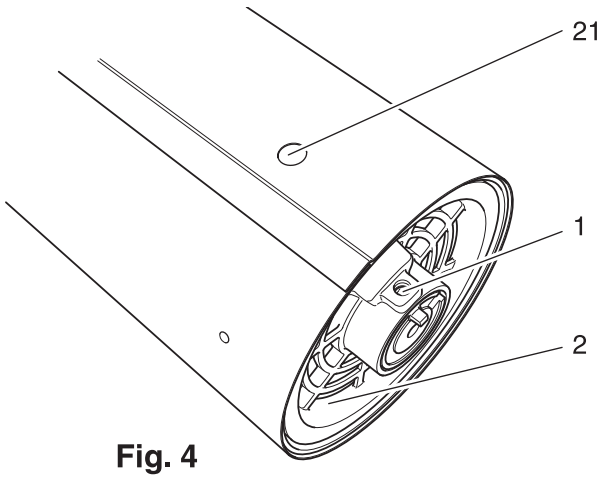

Fig. 4

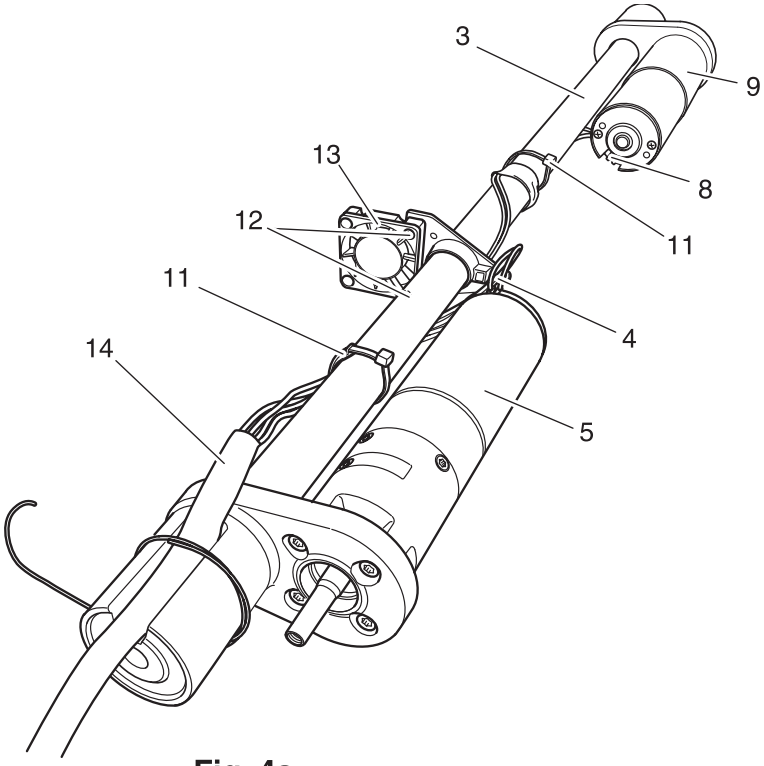

Fig. 4a

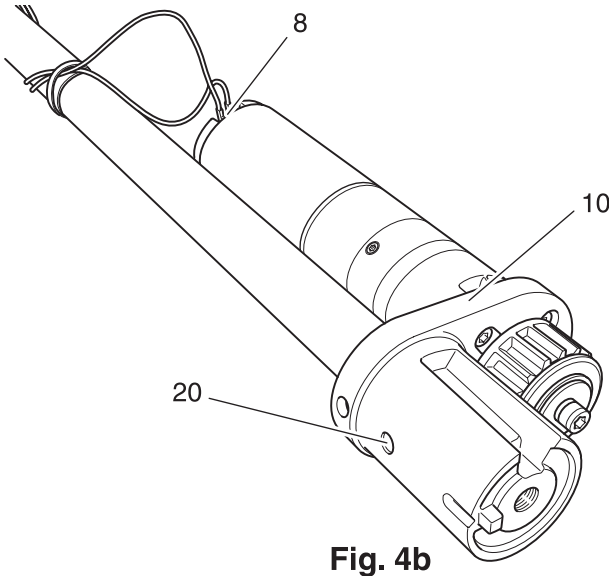

Fig. 4b

5. Installing the roller assembly

- Fold the padding over four times and lay it on the heating shoe to avoid damaging the latter.
- Place the roller onto the heating shoe and insert wire branch 10 through the drill hole in the bearing arm (fig. 5).
- Fit the roller on both bearing arms.
- Pull wire branch 10 through.
- Now insert the two screws 18 into the ends of the roller and tighten them by turning 2-3 times.
- Fit crank 16 and tighten screw 17.
- Support bearing lever as shown in fig. 5.
- Fit needle bearing 15 and washer 14.
- Insert wire branch 10 into the conduit of the bearing and supporting arm (fig. 5a).
- Fit the two wire clamps 13.
- Fit circuit board and insert screw 12.
- Plug connecting wire 11 onto the circuit board.
- Folding the steam ironer.
- Connect plugs 7, 8, 9 onto the circuit board (fig. 5b).

  Attention:

  Make sure you do not confuse them (7= blue/ brown, 8= red/black)

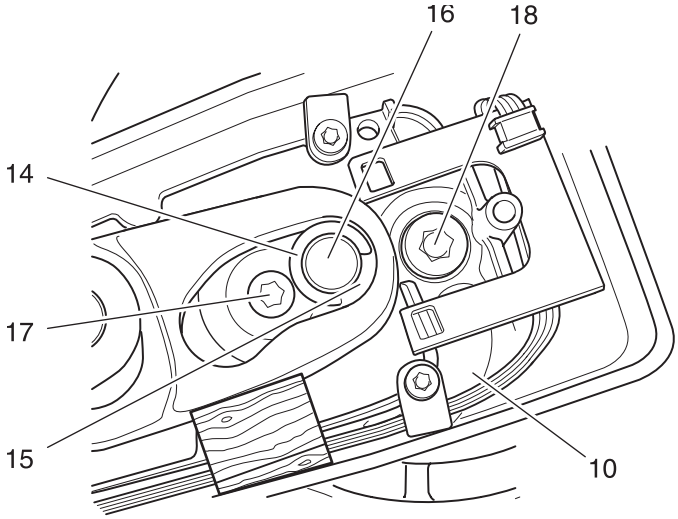

Fig. 5

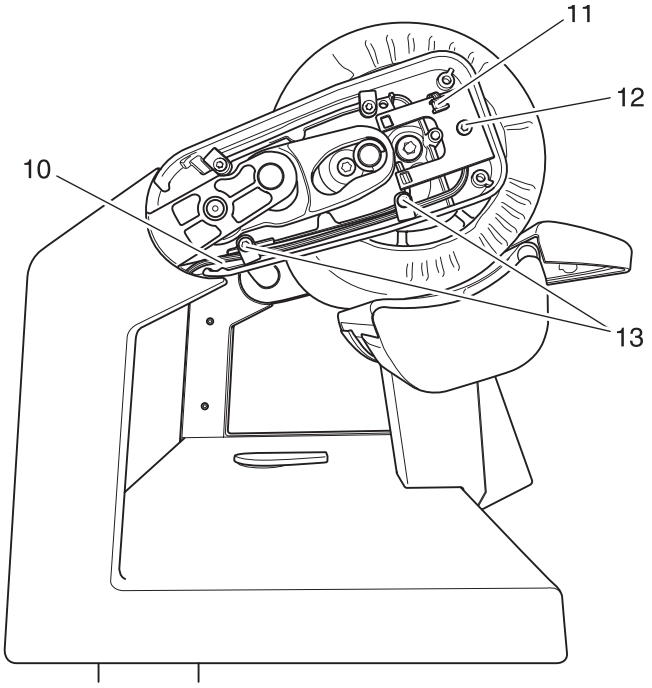

Fig. 5a

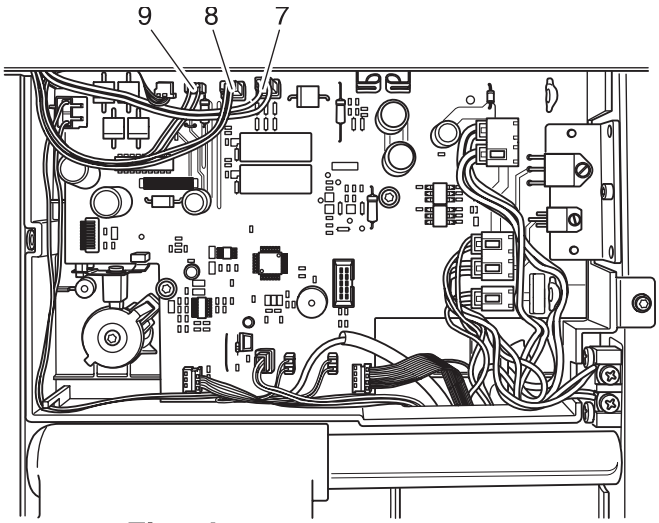

Fig. 5b

- Mount the cover plate and secure it with the two screws 6 (fig. 5c).
- Switch on the steam ironer, allow crank to advance beyond the lift position, until it reaches the position in the guide, which is shown in fig. 5d.
- Switch off the steam ironer in this position.
- Now lift the left end of the roller, at the same time tightening screw 18 at this end.

■ This step prevents the crank from jamming against the roller, which could cause sluggish operation in the „raise/lower“ mode.
This step should be performed every time the roller is refitted.

- Then tighten screw 18 on the right-hand side.

■ Insert and tighten screw 20 of the right motor flange through drill hole 21 (fig. 5e), before wrapping the roller.

- Replace all covers and tighten screws 2 to 5 (fig. 5f).
- Switch on the steam ironer.
- Operate pedal bar and bring roller in pressing position.
- Switch off the steam ironer.
- Fit and secure release lever 1.
- Then turn it to front (tension).
- Switch on the steam ironer and wrap the roller as described in Section 6 of this service manual.
- Carry out a check to ensure that the steam ironer operates properly.

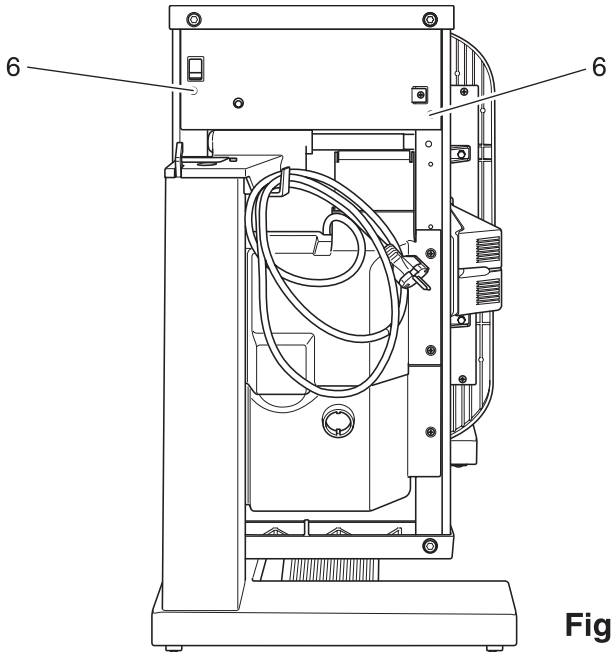

Fig. 5c

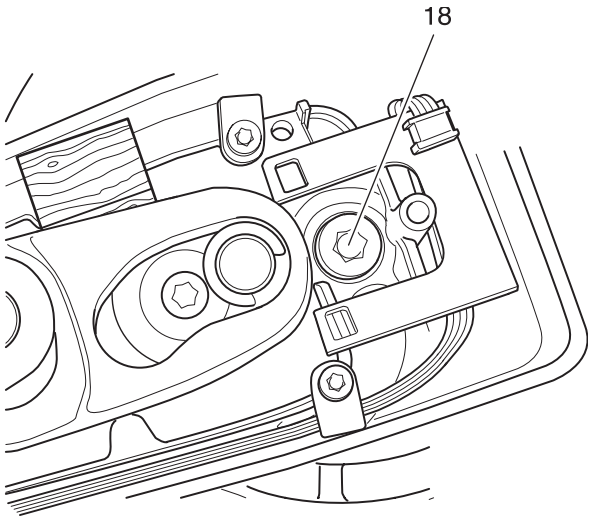

Fig. 5d

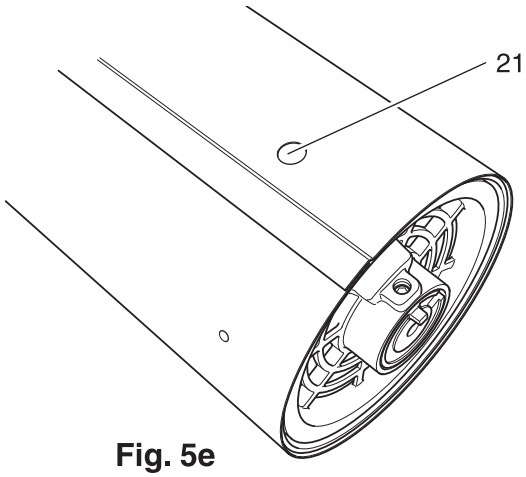

Fig. 5e

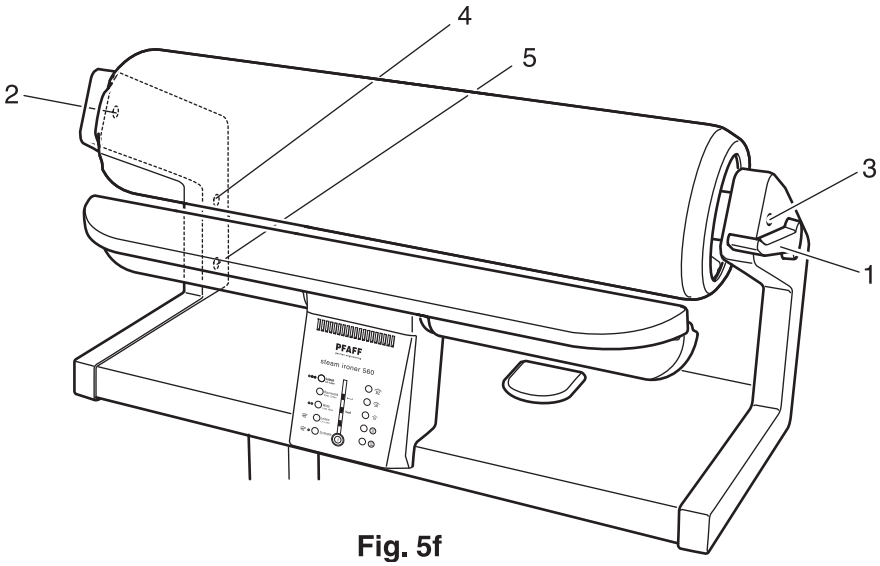

Fig. 5f

6. Wrapping the roller cover

Wrapping Program of the steam ironer

- Set up the steam ironer in a working position.
- Plug the steam ironer into the mains supply.
- While pressing the „continuous steam“ key, switch on the steam ironer.
- Press the „steam level 3“ key.
- Press the „steam level 1“ key.
- The Wrapping Program is now activated and displayed (fig. 6).
- Operate the pedal bar and place roller covering as below:

Fig. A
If the jute cover has become loose, re-attach it with Jowat adhesive.
Order No. 28-931440-07 (Jowat adhesive).

Fig. B
Stop the roller with the pedal bar, unwrap the first 30 cm of the loose end of the jute cover and lay it out flat.

Fig. C
Align the padding with the roller with the selvage to the front and rough side up, and turn the roller.
Hold the padding at the roller ends to guide it; after it is completely wound up, allow the roller to rotate for about 5 minutes more.
In the case of new padding material, however, the roller rotation time should be increased to 15 minutes.

Fig. D
Stop the roller without raising, so that the first 30 cm of padding lies flat in front.

Fig. E
Insert the roller cover as shown.

Fig. F
Turn the roller and guide the cover as shown, thereby ensuring that the overlap is the same at each end.
Neither of the two roller openings should be covered during this procedure.
After the cover has been fitted, rotate the roller about 3 times more to ensure that the cover has a taut edge and is not creased.

Important:
To ensure adequate ventilation of the roller, only original covers should be used.

Fig. G
Switch off the appliance when the end of the roller cover has reached the heating shoe.

Fig. H
First pull the lower, then the upper cord. Tie them together to form a loop knot.

Fig. I
Use a suitable implement to push the cords under the cover so that they are safely concealed and do not hang out.

A

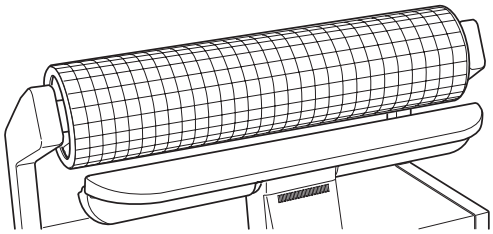

B

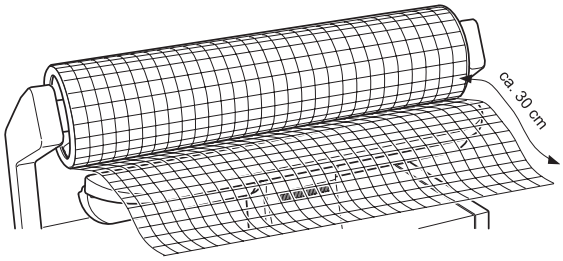

C

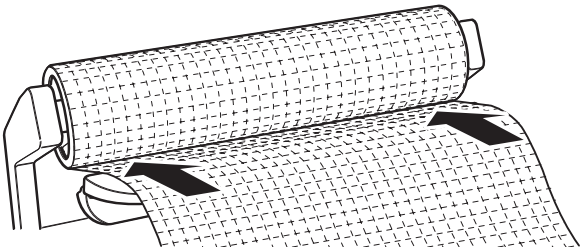

D

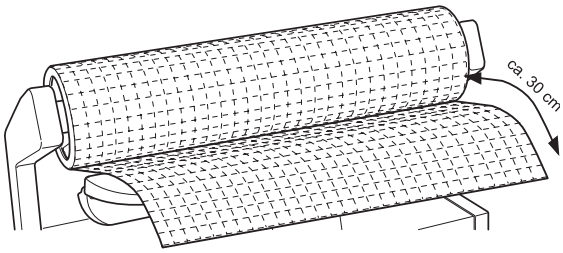

E

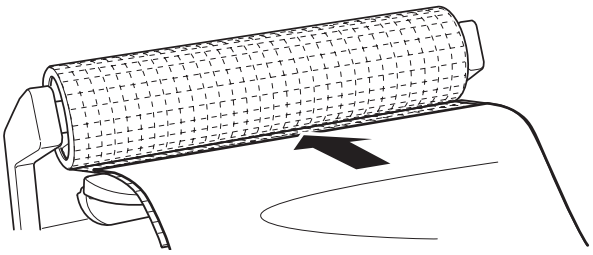

F

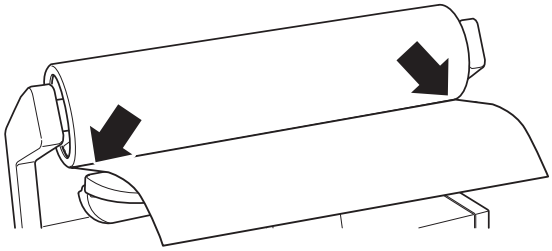

G

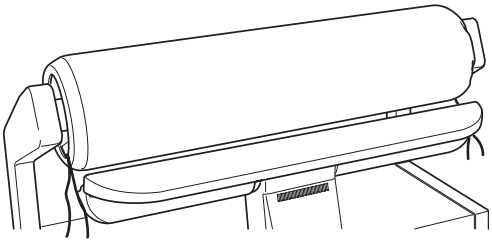

H

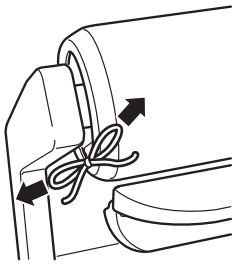

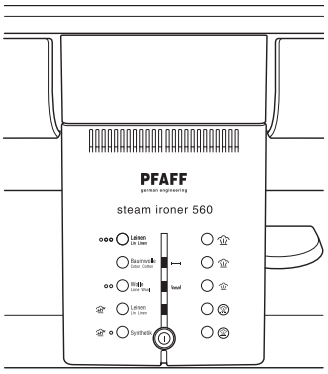

I

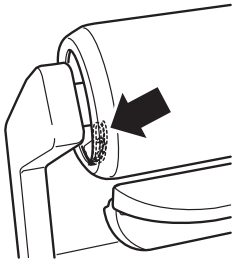

Fig. 6

7. Removing the heating shoe stand

Important:
After removing the heating shoe stand it is possible to replace following units, if necessary

heating-shoe sensor
temperature-sensor fuse and steam-generator sensor
steam generator
heating shoe assembly

- Disconnect the steam ironer's mains plug.
- Tilt the steam ironer over (fig. 7).
- Remove screws 1 from the cover plate.
- Remove the cover plate.
- Set up the steam ironer in a working position.
- Lay the high-speed iron face-up on the floor (fig. 7a)
- Remove screws 2 from the cover.
- Remove the cover.
- Remove cable sleeve 3.
- Set up the steam ironer in a working position.
- Tilt the steam ironer over.
- Lift the catches 21 only 1-2 mm and disconnect plugs 4 (wire branch of the heating shoe) and 5 (wire branch of the steam generator).
- Disconnect plugs 6 to 8 (fig. 7b).
- Carefully remove wires from the conduit.
- Disconnect plugs 9 to 11 from the control panel board (fig. 7c).
- Pull out silicone tube 12 from the water pump.
- Set up the steam ironer in a working position.
- Remove screws 13 from the heating shoe stand.
- Carefully remove the heating shoe stand.

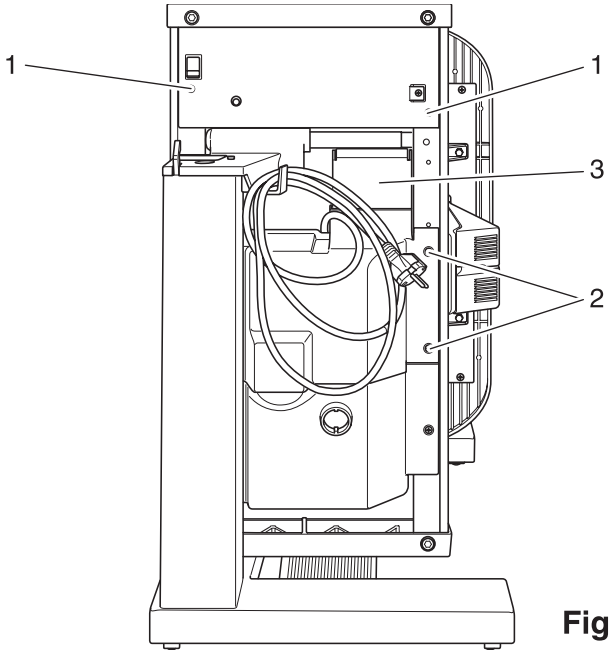

Fig. 7

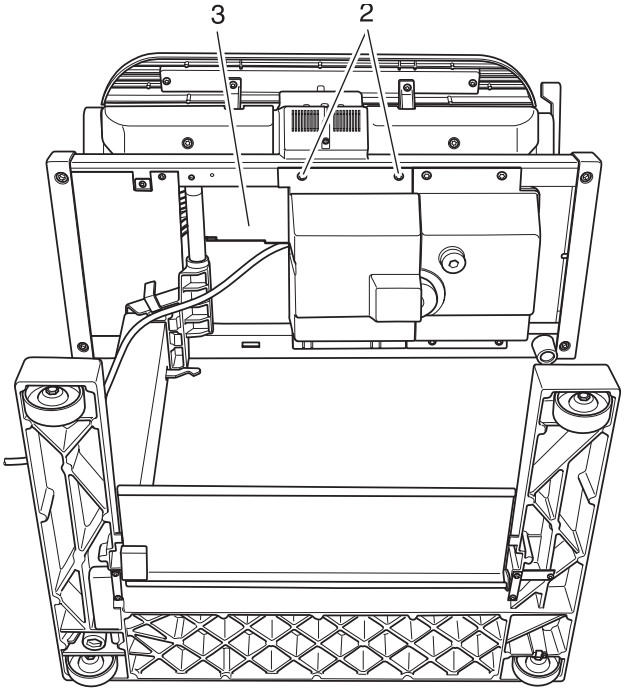

Fig. 7a

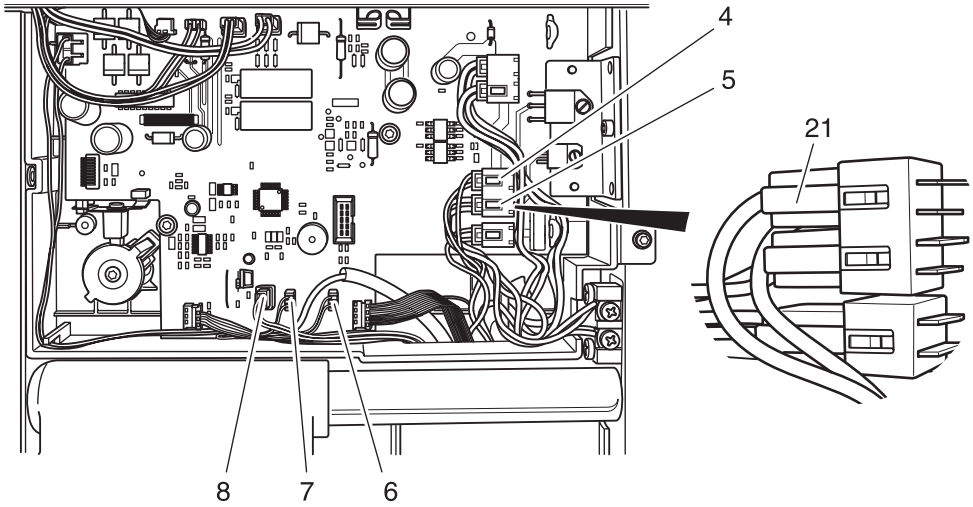

Fig. 7b

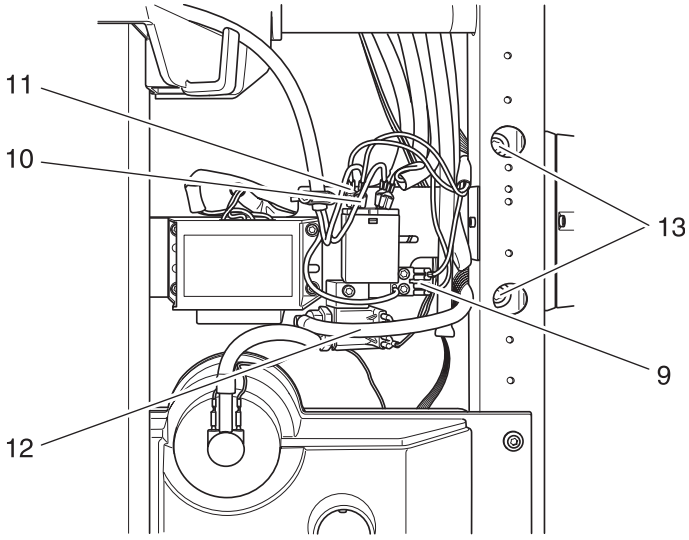

Fig. 7c

- Lay heating shoe stand with heating shoe face-down (fig. 7d).
- Remove screw 14 from the control panel unit.
- Tilt control panel to the front (fig. 7e).
- Disconnect plug socket 15 from the evaporator unit.
- Remove the control panel unit carefully.
- Remove screws 16 (fig. 7d).
- Remove both covers 17 with form shims.
- Remove screws 18 und supporting board (fig. 7e).
- Disconnect plugs 19 (fig. 7f).
- Remove screws 20 and take off the heating shoe stand (fig. 7e).

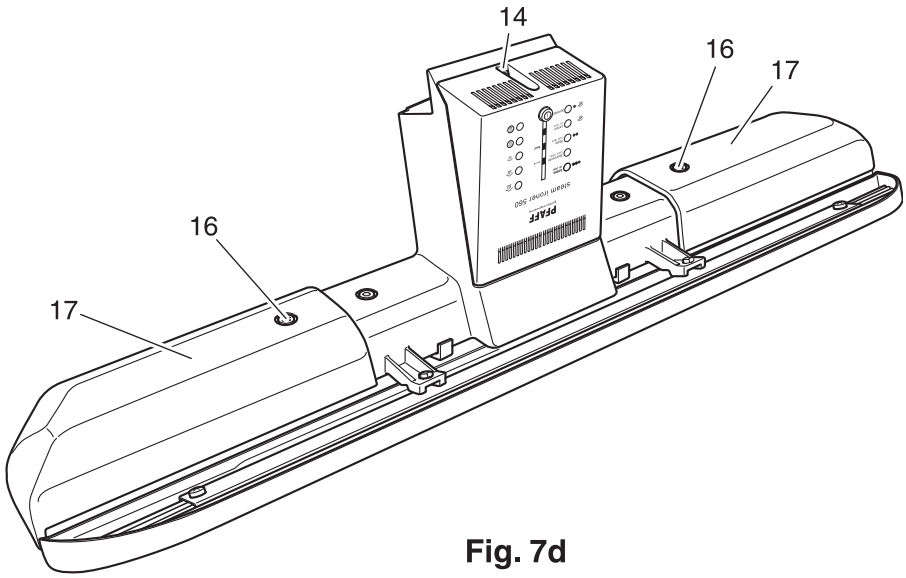

Fig. 7d

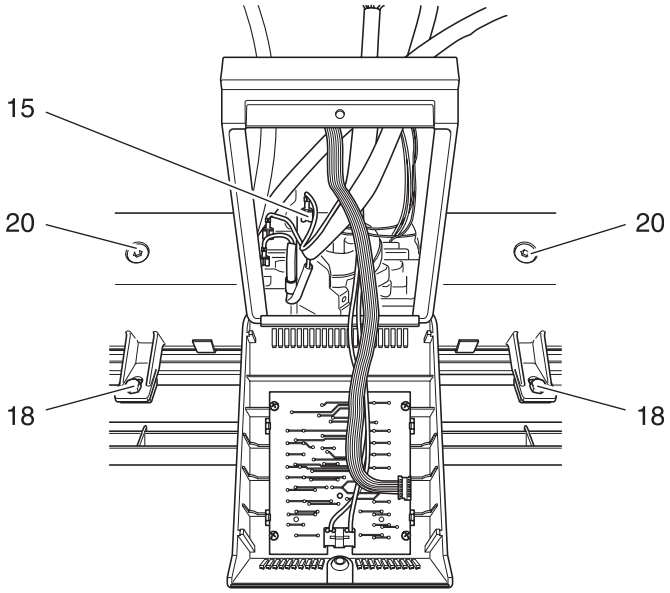

Fig. 7e

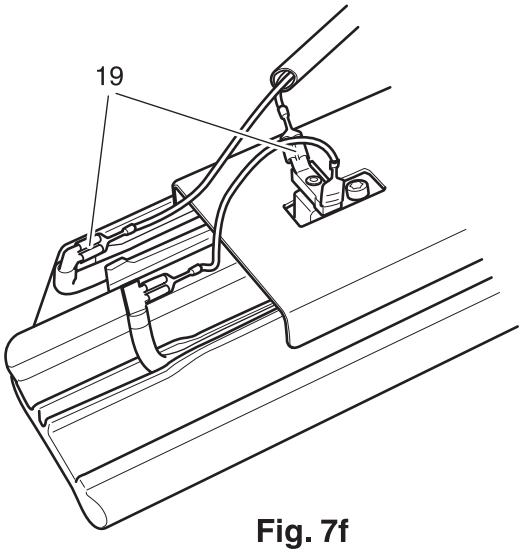

Fig. 7f

8. Replacing the heating-shoe sensor

Removing:

- Remove screw 1 (fig. 8).
- Remove heating-shoe sensor 2 from the heating shoe.

Refitting:

- Place heating-shoe sensor 2 and insert screw 1.
- Bring the heating-shoe sensor in the position shown in fig. 8 and hold it firmly.
- Tighten screw 1.

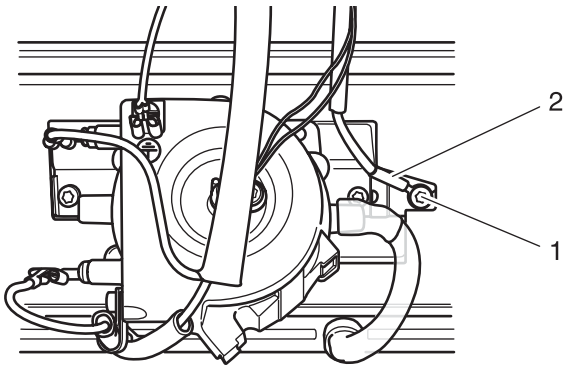

Fig. 8

9. Replacing the steam-generator sensor

Removing:

- Remove screw 3 (fig. 9).
- Remove the retaining spring.
- Remove sensor 4 from the steam generator.
- Wipe off the heat-conducting paste.

Refitting:

- Fill heat-conducting paste into the drill hole of the steam generator.
- Place sensor 4 into the drill hole of the steam generator.
- Fit screw 3 with the retaining spring.
- Tighten screw 3.

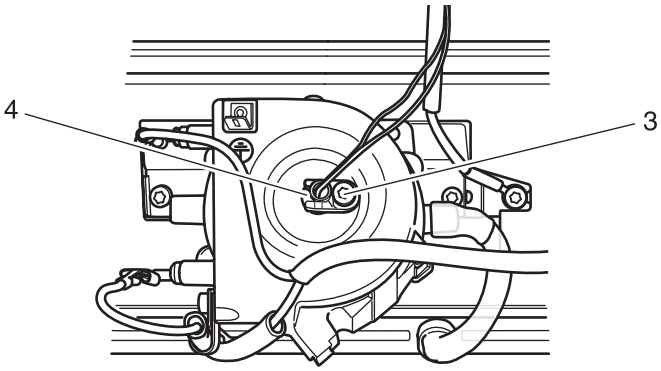

Fig. 9

10. Replacing the temperature-sensor fuse in the steam generator

Removing:

- Disconnect plugs 5 and 6 (fig. 10).
- Remove screw 7.
- Remove temperature-sensor fuse 8 with wire branch.

Refitting:

- Fit temperature-sensor fuse 8 with wire branch.
- Place temperature-sensor fuse as shown in fig. 10 and hold it firmly.
- Tighten screw 7.
- Connect plugs 5 and 6 onto the steam generator.

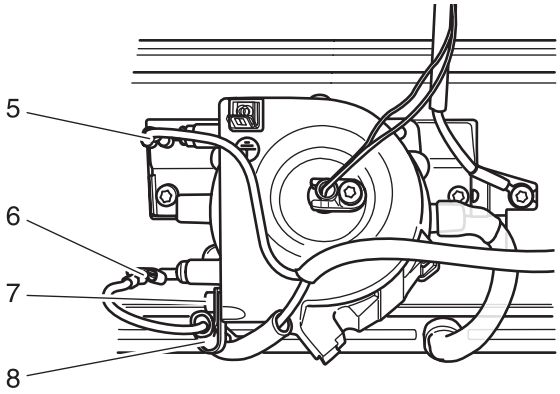

Fig. 10

11. Replacing the steam generator

Removing:

- Pull out silicone tube 9 from steam generator 11 (fig. 11).
- Remove screws 10.
- Remove steam generator 11.

Refitting:

- Fit steam generator 11.
- Insert and tighten screws 10.
- Fit silicone tube 9 onto the steam generator 11.

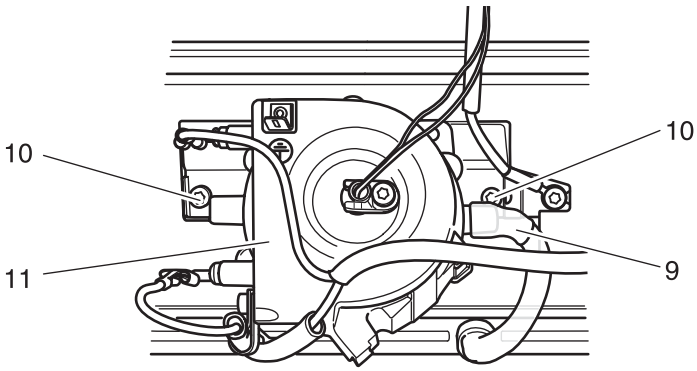

Fig. 11

12. Replacing the heating shoe assembly

Removing:

- Remove screw 1 (fig. 12).
- Remove heating-shoe sensor 2 from heating shoe.
- Pull out silicone tube 9 from the steam generator.
- Remove screws 10.
- Remove the complete steam generator 11.
- Disconnect plugs 12 from the temperature-sensor fuse of the heating shoe (fig. 12a).
- Remove screw 13.
- Remove the complete temperature-sensor fuse 14.
- Remove screws 15.
- Remove reflect plate 16.

Refitting:

- Mount reflect plate 16.
- Insert and tighten screws 15.
- Fit temperature-sensor fuse 14.
- Insert and tighten screw 13.
- Connect plug 12.
- Fit steam generator 11 (fig. 12).
- Insert and tighten screws 10.
- Fit silicone tube 9 onto steam generator.
- Place heating-shoe sensor 2 and insert screw 1.
- Place the heating-shoe sensor in the position shown in fig. 8 and hold it firmly.
- Tighten screw 1.

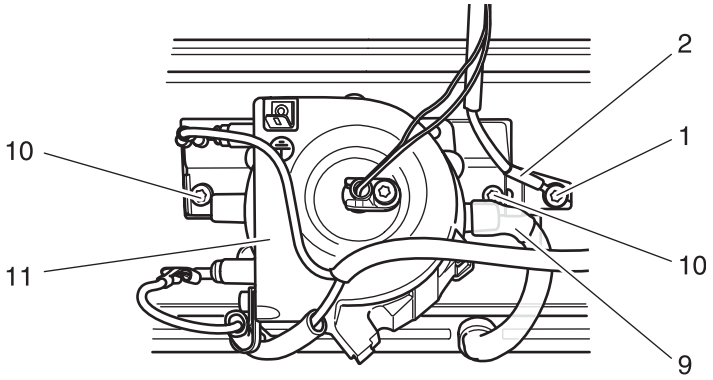

Fig. 12

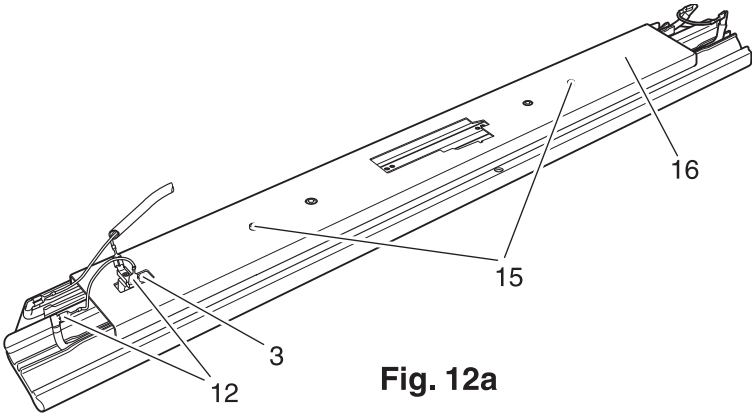

Fig. 12a

13. Installing the heating shoe stand

- Place the heating shoe stand onto the work surface.
- Make sure there are all insulating caps (4 caps on the front and 5 caps on the rear) (fig. 13).
- Connect plugs 19.
- Insert and tighten screws 20 (fig. 13a).
- Connect plug 15 onto the steam generator.
- Swing the front panel back onto the heating shoe stand and secure it with screw 14.
- Mount cover plates 17 with form shims (fig. 13b).
- Insert and tighten screws 16.
- Mount the supporting board with screws 18 and secure it with a clearance of 3 mm from the heating shoe.
- Lean the heating shoe stand against the table and place the wire branches into the guides.
- Insert and tighten screws 13 (fig. 13c).
- Tilt the steam ironer over.
- Fit silicone tube 12 onto the water pump.

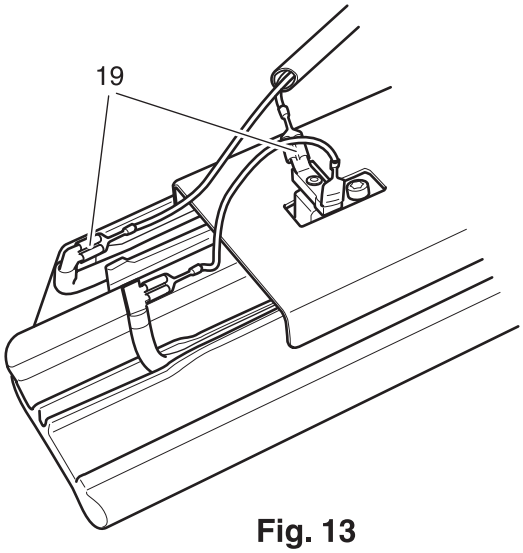

Fig. 13

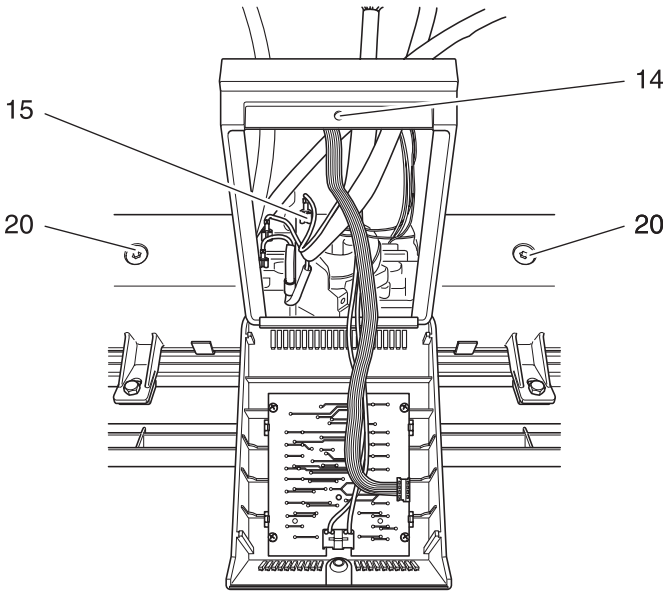

Fig. 13a

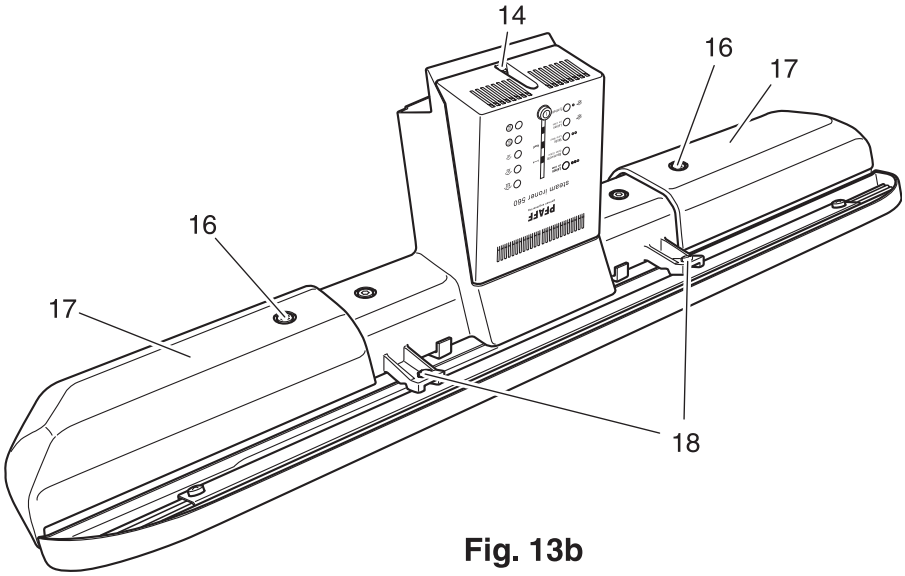

Fig. 13b

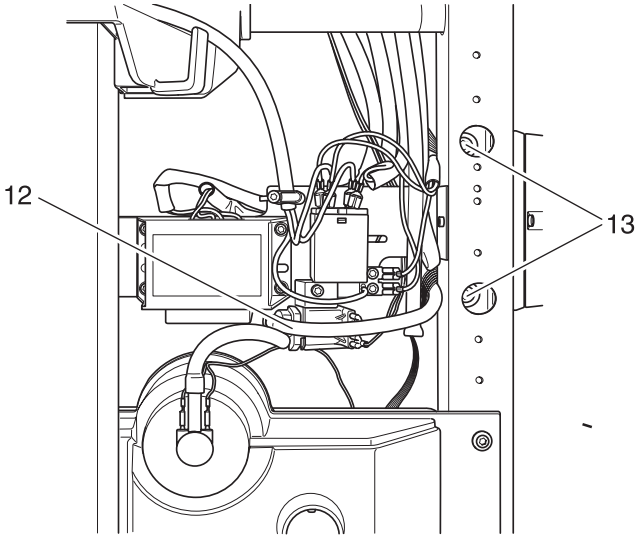

Fig. 13c

- Insert wire branches as shown in fig. 13d.
- Connect plugs 9 to 11 of the control panel (fig. 13e).
- Connect plugs 6 to 8 (fig. 13f).
- Connect plugs 4 (heating shoe) and 5 (steam generator).
- Fit cable sleeve 3 (fig. 13h).
- Set up the steam ironer in a working position.
- Lay the high-speed iron face-up on the floor (fig. 13g).
- Mount and secure cover with screws 2.
- Set up the steam ironer in a working position and tilt it over (fig. 13h).
- Mount cover plate and secure it with screws 1.
- Set up the steam ironer in a working position.
- Carry out a check to ensure that the steam ironer operates properly.

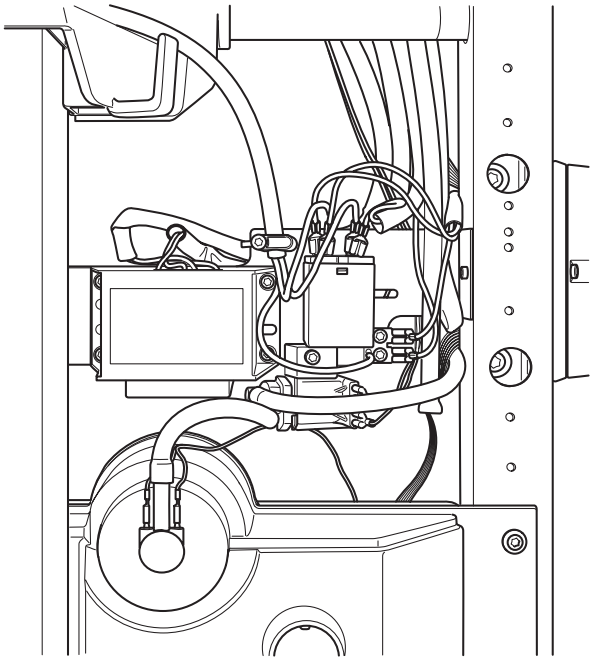

Fig. 13d

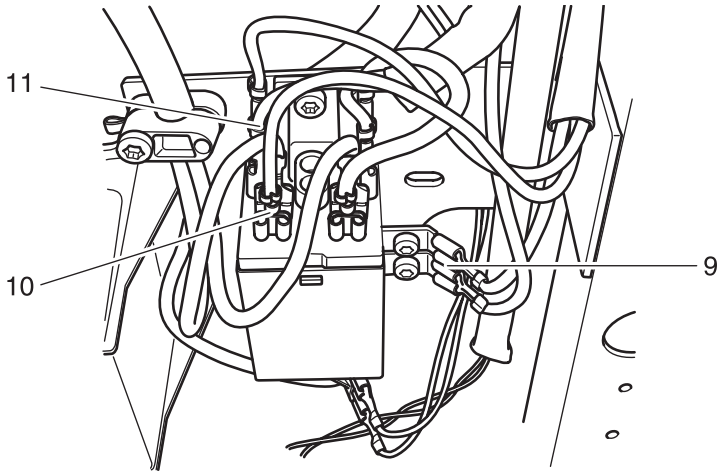

Fig. 13e

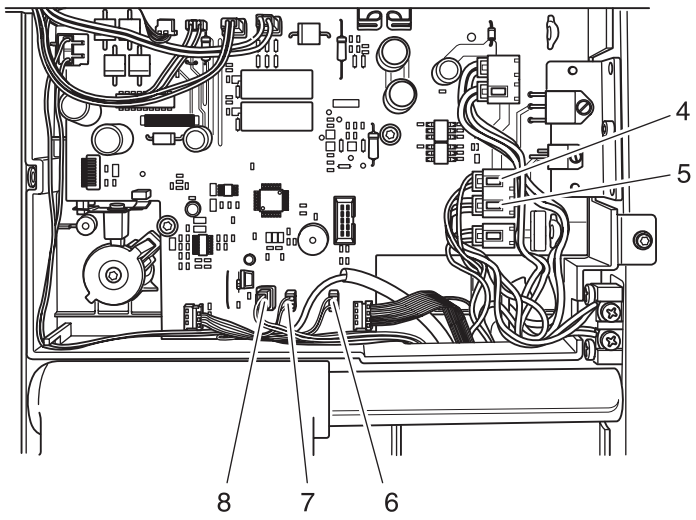

Fig. 13f

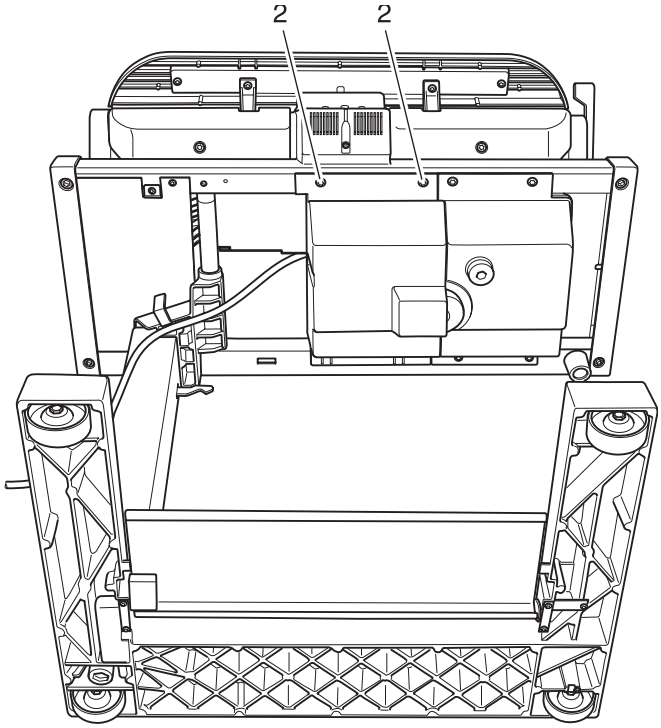

Fig. 13g

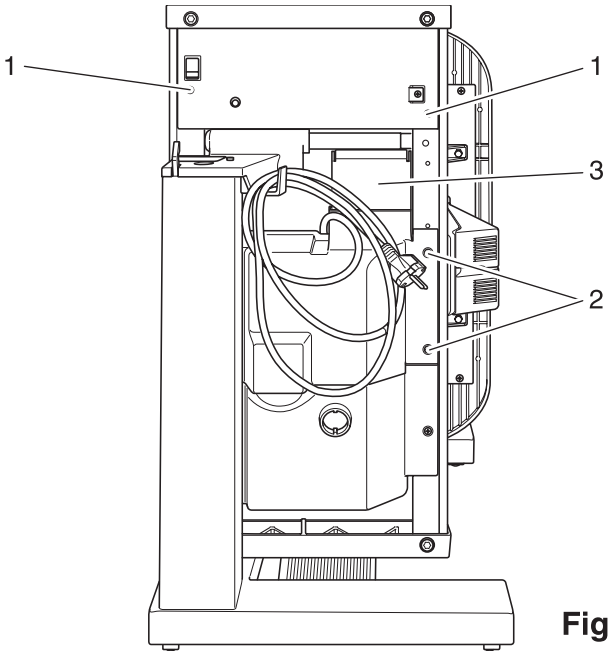

Fig. 13h

14. Replacing the water tank

Removing:

- Disconnect the steam ironer's mains plug.
- Set up the steam ironer in a working position.
- Lay the steam ironer face-up on the floor.
- Remove screws 1 from the cover plate (fig. 14).
- Remove the cover plate.
- Set up the steam ironer in a working position (fig. 14a).
- Place a receptacle (bucket) under the water tank.
- Remove seal 2 and the antiliming cartridge from the water tank.
- Remove discharging screw and polystyrene float.
- Remove silicone tube 3 from water tank (fig. 14b).
- Completely empty water tank.
- Remove wires 4 from water tank.
- Lay the steam ironer once again face-up on the floor.
- Remove screws 5 from water tank and swing the water tank open.
- Remove screw 6 and take off the complete circuit board.
- Remove silicone tube 7 from water tank and detach the complete water tank.

Please note:
It is now possible to replace the circuit board, if defective.

Refitting:

- Hold water tank close to the steam ironer and place silicone tube 7 onto water tank.
- Fit circuit board and tighten screw 6.
- Set up water tank and secure it with screws 5.
- Connect wires 4 to the water tank.
- Fit silicone tube 3 onto the water tank (fig. 14b).
- Fit and slightly tighten discharging screw with polystyrene float.
- Fit antiliming cartridge and seal 2 onto the water tank.
- Fit cover and secure it with screw 1.
- Set up the steam ironer in a working position.
- Carry out a check to ensure that the steam ironer operates properly.

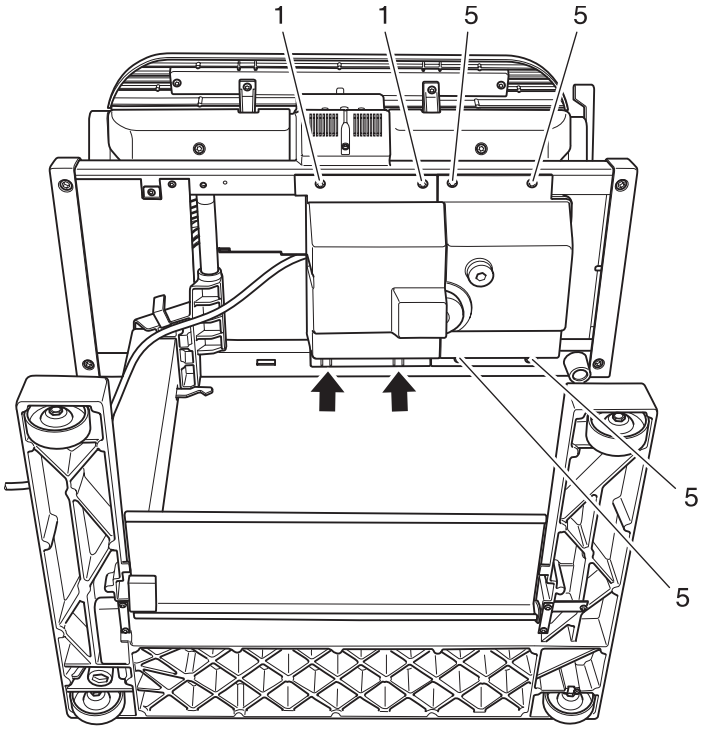

Fig. 14

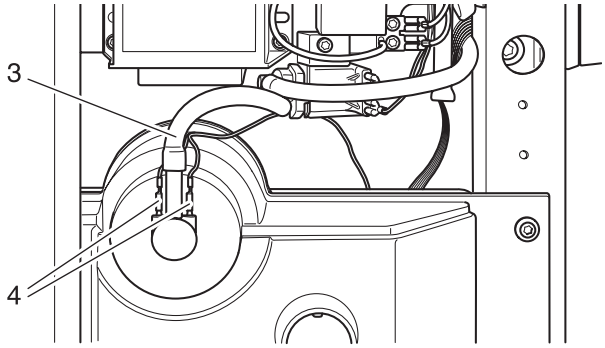

Fig. 14b

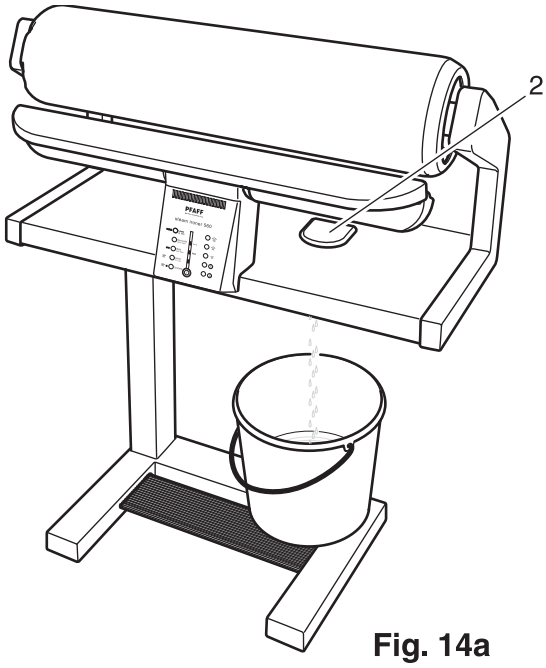

Fig. 14a

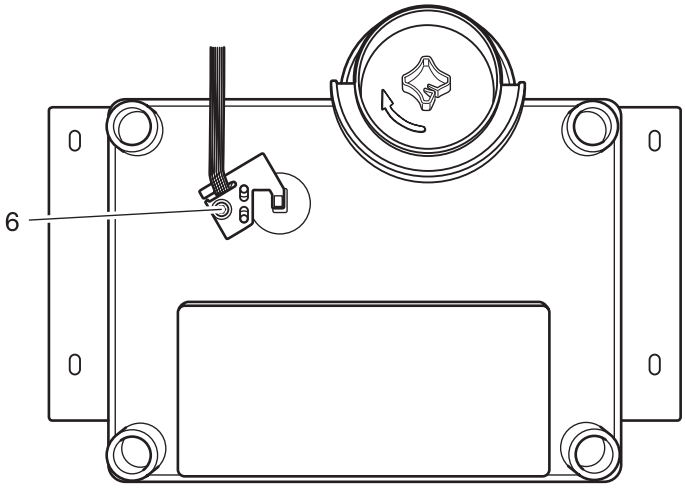

Fig. 14c

15. Replacing the circuit board in the connection box

Removing:

- Disconnect the steam ironer's mains plug.
- Tilt the steam ironer over.
- Remove screws 1 (fig. 15).
- Take off cover plate.
- Set up the steam ironer in a working position.
- Lay the steam ironer face-up on the floor (fig. 15a).
- Remove screws 2 from the cover.
- Remove the cover.
- Remove cable sleeve 3.
- Set up the steam ironer in a working position and folding the steam ironer.
- Use a screwdriver to press against the upper tab of cover 4.
- Then remove thrust piece 5 and cover 4 (fig. 15b).

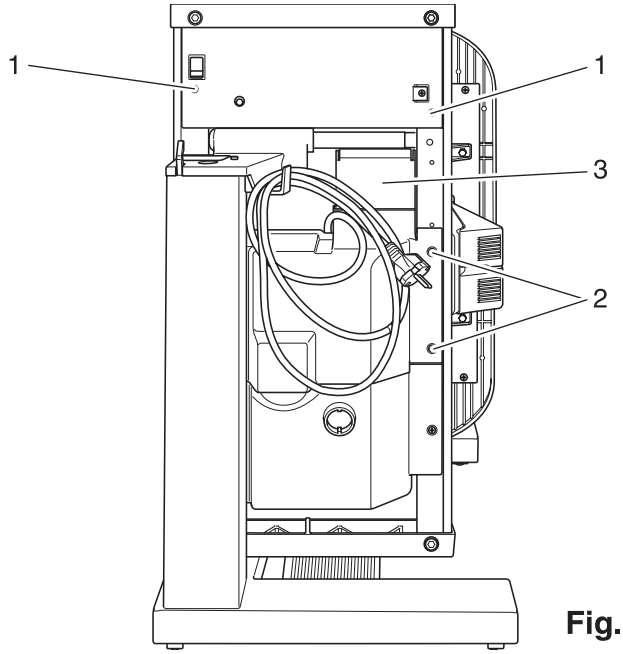

Fig. 15

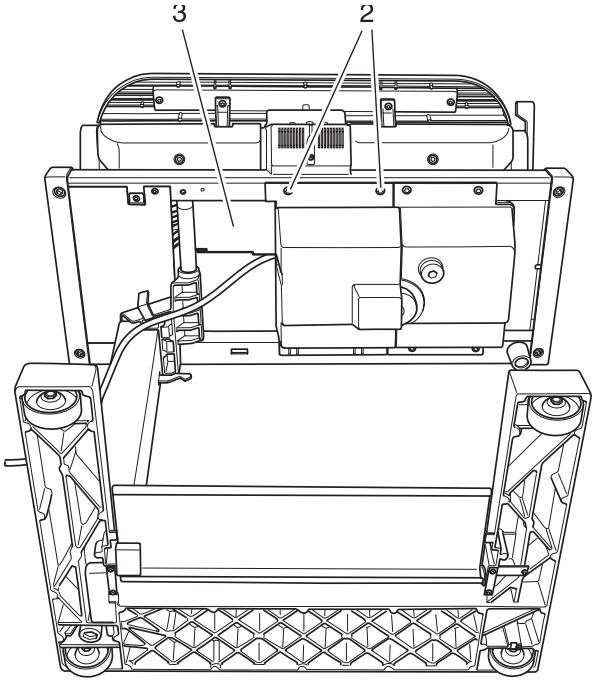

Fig. 15a

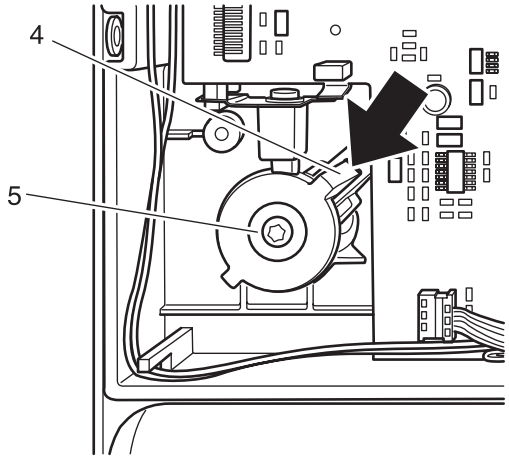

Fig. 15b

- Lift the catches of the connector plugs only 1-2 mm.
- Disconnect the plugs that are shown in fig. 15c (flat plugs/connector plugs) from circuit board.

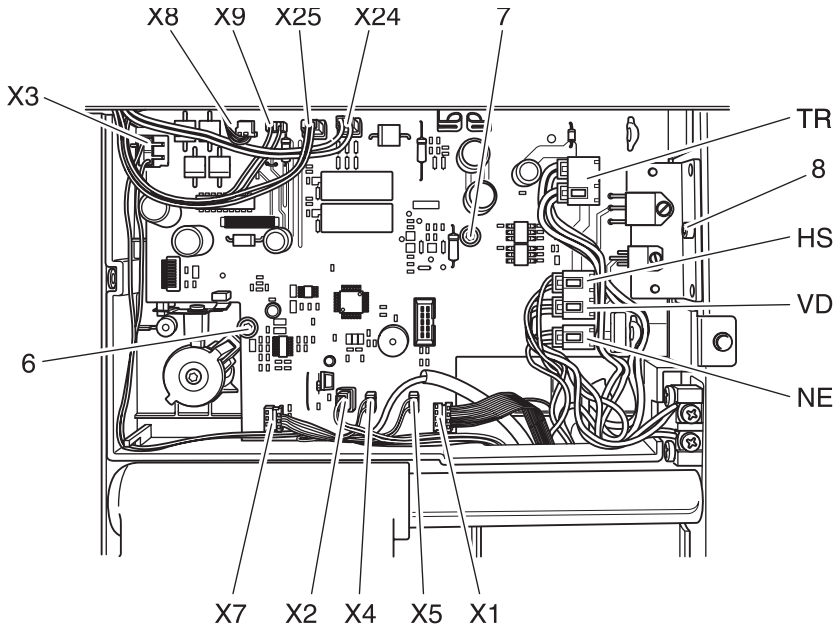

Fig. 15c

- Remove screws 6 to 8.
- Carefully remove the complete circuit board from the connection box.

Refitting:

- Carefully refit the complete circuit board in the connection box.
- Insert and tighten screws 6 to 8.
- Connect flat plugs of wire branches 1 to 5.
- Run connecting wires as shown in fig. 15c.

Important:
The flat plugs of the wire branches 1 to 5 and the connector plugs must be refitted in the correct order on the circuit board.
Make sure you do not confuse them (fig. 15c).

Wire branch 1
composed of 3 wires in the colors **black, blue, brown**
Socket / TR = transformer

Wire branch 2
composed of 2 wires in the colors **black and white**
Socket / HS = heating shoe

Wire branch 3
composed of 2 wires in the colors **black and brown**
Socket / VD = steam generator

Wire branch 4
composed of 2 wires in the colors **blue and black**
Socket / NE = power cable

Wire branch 5
composed of 2 wires in the color **black**
Socket / X3 = transformer

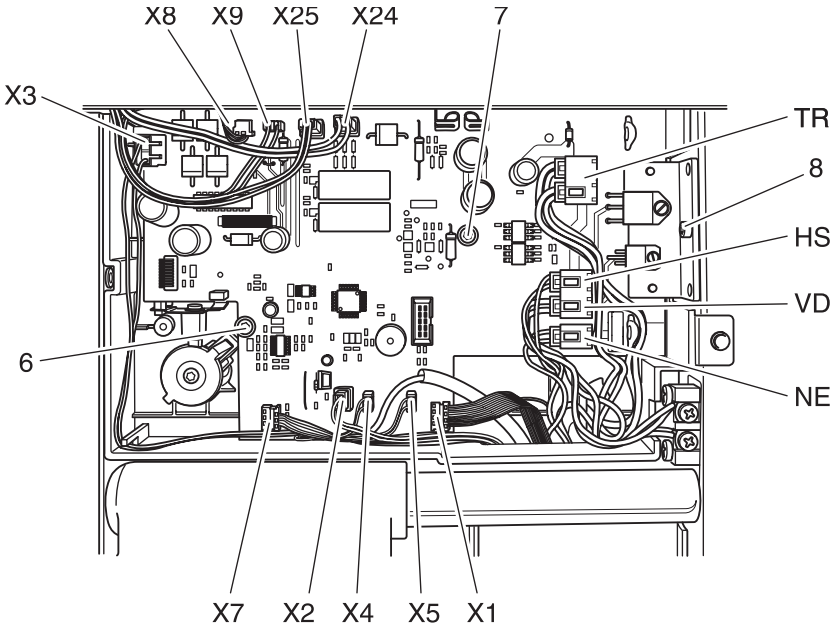

Fig. 15c

- Fit the connector plugs onto the circuit board and run the wires in the connection box.
- Fit thrust piece 5.
- Fit cover 4.

Important

Make sure that both tabs on the cover are firmly latched, when you fit the thrust piece.

- Lay the steam ironer face-up on the floor (fig. 15a).
- Fit cable sleeve 3.
- Place the cover.
- Insert and tighten screws 2 of the cover.
- Fit cover plate and secure it with screws 1 (fig. 15).
- Set up the steam ironer in a working position.
- Carry out a check to ensure that the steam ironer operates properly.

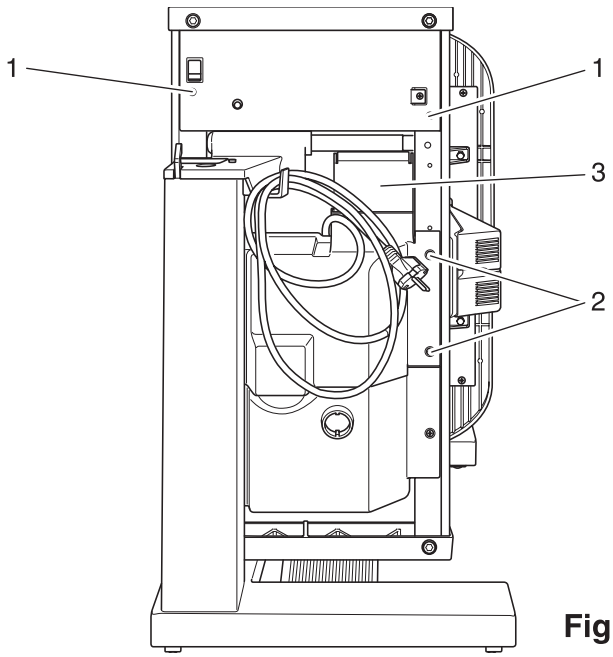

Fig. 15

16. Replacing the control panel

Removing:

- Disconnect the steam ironer's mains plug.
- Set up the steam ironer in a working position.
- Remove screw 1 from control panel 2 (fig. 16).
- Tilt control panel to the front.
- Disconnect plugs 3 to 5 from the circuit board (fig. 16a).
- Remove the complete control panel 2 from the heating shoe stand.

Removing the control-panel circuit board

- Remove screws 6.
- Remove circuit board 7 with control panel.
- Slightly lift brackets 8 and remove panel (fig. 16b).
- Remove keypad 9.

Refitting the control-panel circuit board

- Place keypad 9 onto circuit board 7.
- Make sure the all 4 brackets 8 click into place behind circuit board 7.
- Place circuit board 7 onto control panel 2.
- Insert and tighten screws 6.

Removing:

- Hold control panel 2 close to the heating shoe stand.
- Connect plugs 3 to 5 onto the circuit board (fig. 16a).
- Secure control panel 2 with screw 1 (fig. 16).

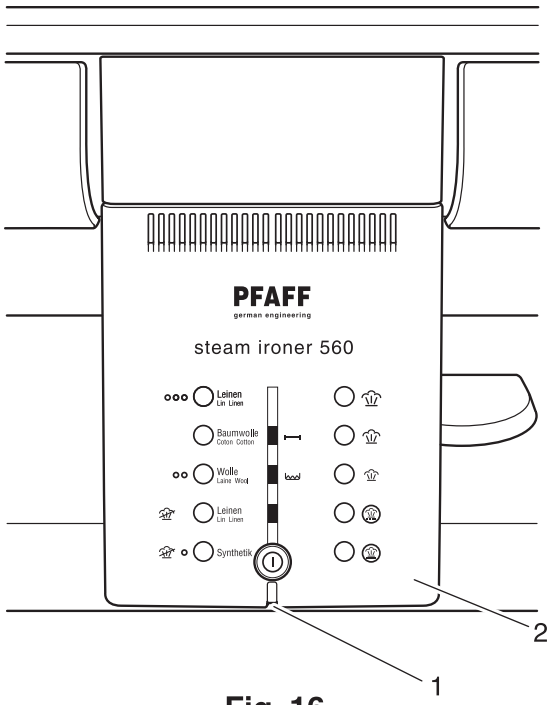

Fig. 16

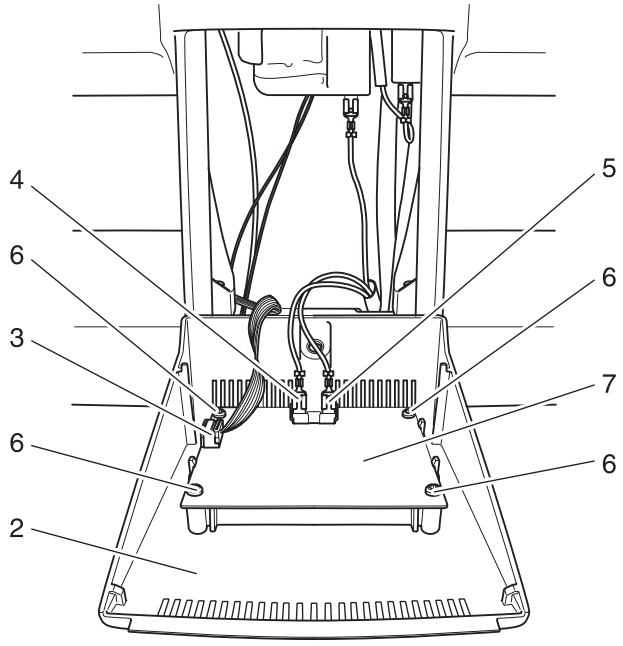

Fig. 16a

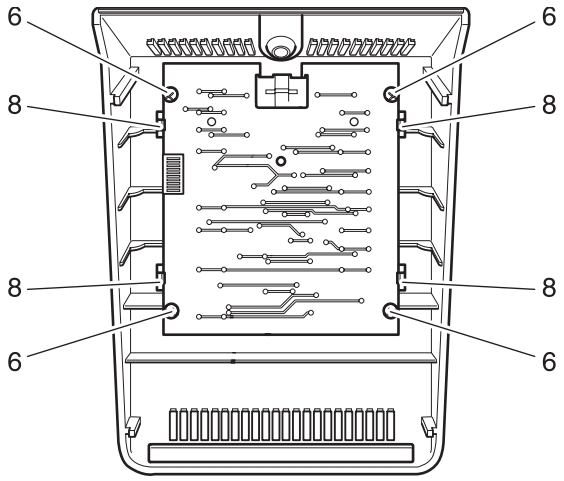

Fig. 16b

17. Replacing the notch lever

Removing:

- Disconnect the steam ironer's mains plug.
- Set up the steam ironer in a working position.
- Lay the steam ironer face-up on the floor.
- Remove screw 1 (fig. 17).
- Push swivel arm with the machine base towards the control panel.
- Lift swivel arm and remove it completely.
- Use an Allan key to remove screw 2 (fig. 17a).
- Remove swivel arm by moving it upwards.
- Use a piercer to knock bolt 3 as far as possible towards the back and remove with combination pliers (fig. 17b).
- Remove notch lever 4.

♦ If the connecting rod was difficult to move or jammed, it should now be possible to remove it.

♦ The locking lever may also be replaced at this point.

Refitting:

- Insert notch lever 4.
- Knock in bolt 3.

♦ Make sure that notch lever 4 springs towards the front, when activated.

- Insert swivel arm (Fig 17a).
- Insert and tighten screw 2.
- Install swivel arm complete with the machine base.
- Tighten screw 1 (fig. 17).
- Carry out a check to ensure that the steam ironer operates properly.

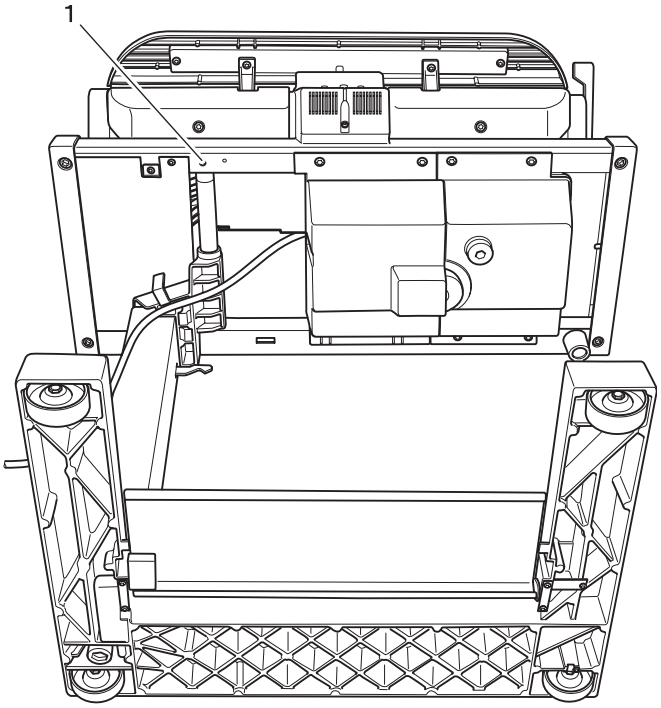

Fig. 17

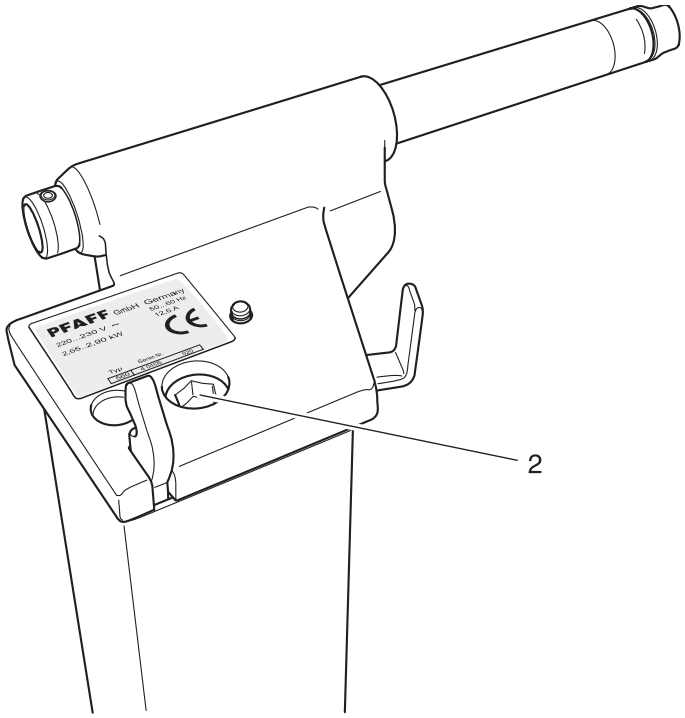

Fig. 17a

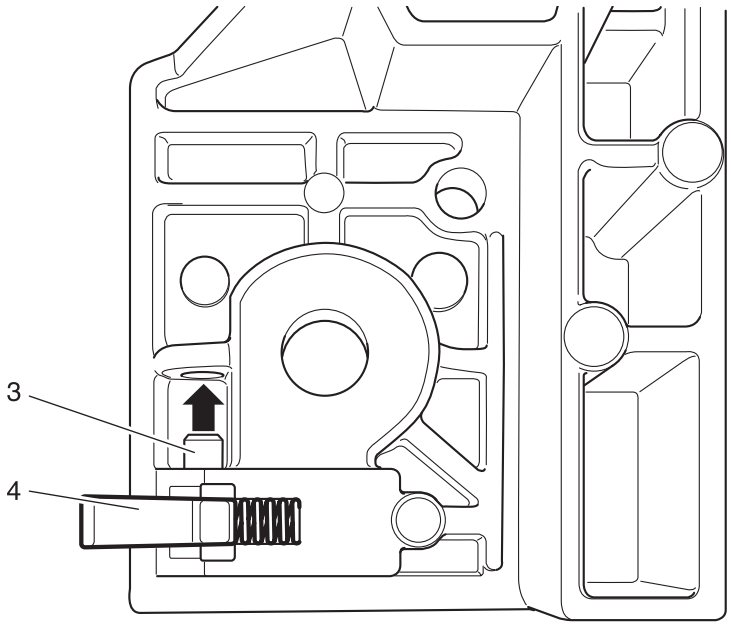

Fig. 17b

18. Replacing the torsion bar

Removing:

- Disconnect the steam ironer's mains plug.
- Set up the steam ironer in a working position.
- Lay the steam ironer face-up on the floor.
- Remove screw 1 (fig. 18).
- Push swivel arm with the machine base towards the control panel.
- Lift swivel arm and remove it completely.
- Knock out torsion bar 5 towards the front from the pin side (fig. 18a).

Refitting:

- Insert the non-offset, cylindrical part of torsion bar 5 into swivel arm.
- Fit swivel arm complete with the machine base (fig. 18).
- Tighten screw 1.
- Carry out a check to ensure that the steam ironer operates properly.

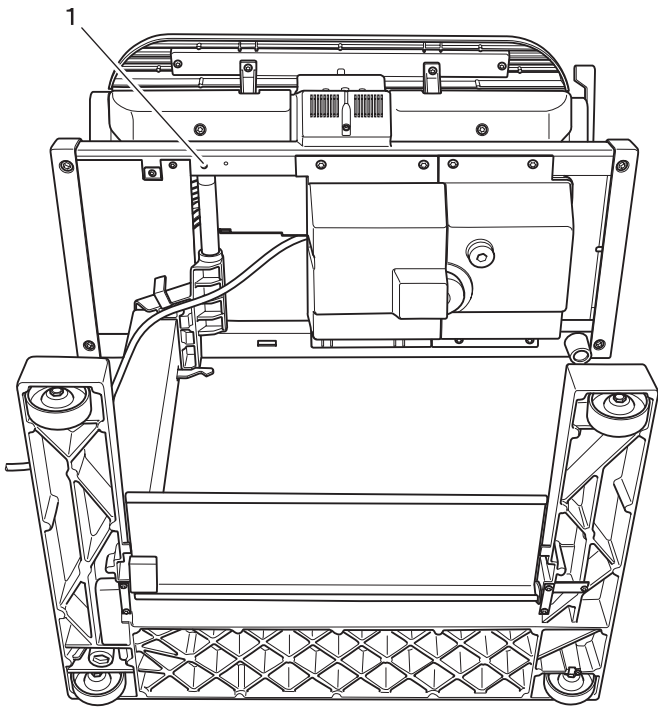

Fig. 18

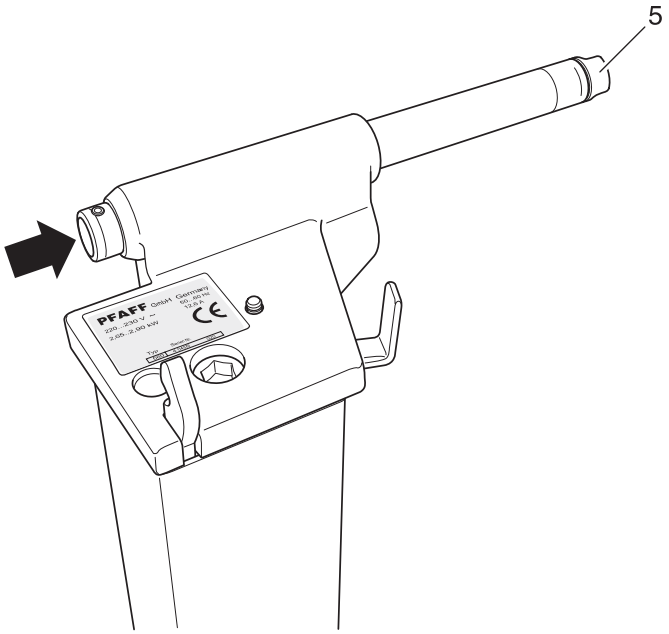

Fig. 18a

19. Replacing the pedal bar and switch lever

Removing:

- Disconnect the steam ironer's mains plug.
- Set up the steam ironer in a working position.
- Lay the steam ironer face-up on the floor.
- Loosen screws 1 by turning approx. 3 times (fig. 19)
- Remove the two screws 2.
- Remove the three brackets.
- Remove pedal bar 3 and the switch lever.

Refitting:

- Refit pedal bar 3 and the switch lever.
- Refit the three brackets.
- Insert screws 2 and tighten.
- Tighten screws 1.
- Set up the steam ironer in a working position.
- Carry out a check to ensure that the steam ironer operates properly.

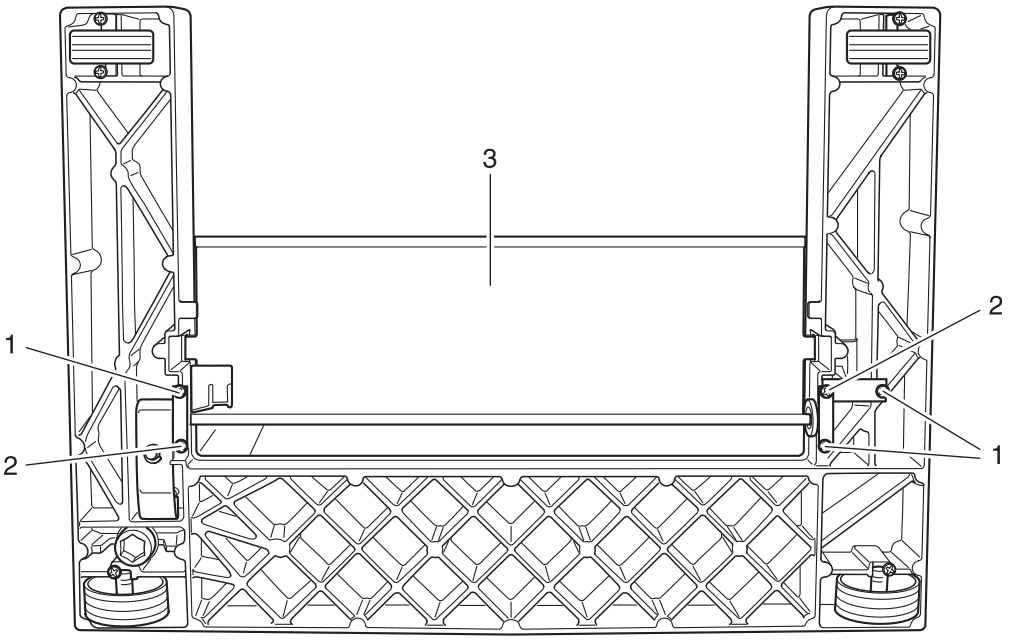

Fig. 19

20. Replacing the brake rubber

Removing:

- With the roller in a raised position and under tension, loosen set screw 1 and remove lever 2 (fig. 20).
- Remove screw 3 and detach cover 4.
- Remove screws 5 and detach the brackets.
- Remove brake rubber 6 with a screwdriver.

Refitting:

- Insert brake rubber 6.
- Insert both brackets and secure with screws 5.
- Mount cover 4 and tighten screw 3.
- Fit lever 2 and tighten set screw 1.

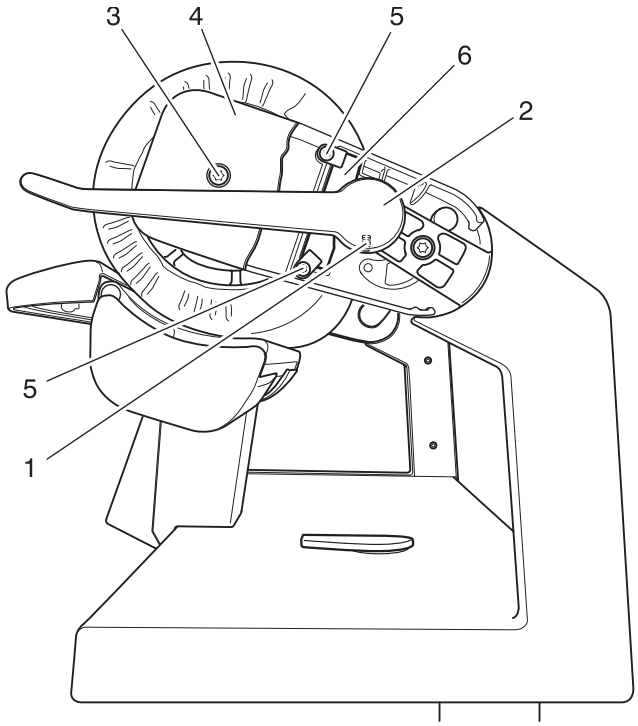

Fig. 20

21. Replacing the thrust piece

Removing:

- Disconnect the steam ironer's mains plug.
- Tilt the steam ironer over.
- Remove screws 1 (fig. 21).
- Remove cover plate.
- Use a screwdriver to press against the upper tab of cover 2. Then remove thrust piece 3 and cover 2 (fig. 21a).

Refitting:

- Insert thrust piece 3.
- Fit cover 2.

Important:
Make sure that both tabs on the cover are firmly latched.

- Fit cover plate and secure it with screws 1 (fig. 21).
- Set up the steam ironer in a working position.
- Carry out a check to ensure that the steam ironer operates properly.

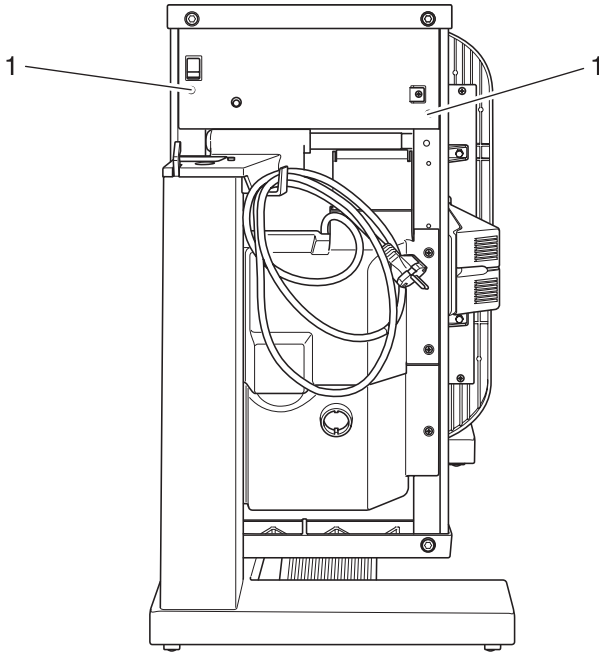

Fig. 21

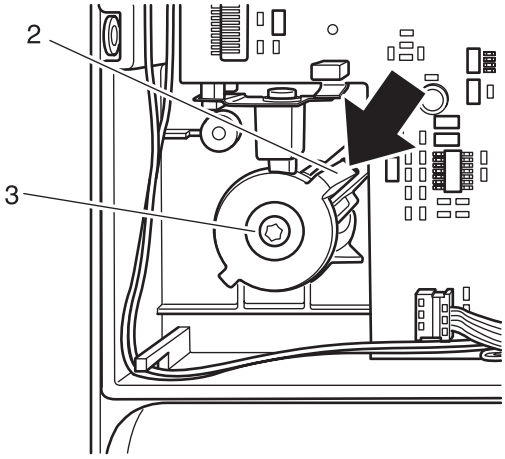

Fig. 21a

22. Replacing the water pump assembly

Removing:

- Disconnect the steam ironer's mains plug.
- Set up the steam ironer in a working position.
- Lay the steam ironer face-up on the floor (fig. 22).
- Remove screws 1 from cover plate 2.
- Remove cover plate 2.
- Set up the steam ironer in a working position.
- Tilt the steam ironer over.
- Pull out silicone tubes 3 and 4 from water pump (fig. 22).
- Disconnect the upper red flat plug 6 from water pump.
- Remove screw 7.
- Remove the water pump assembly with bracket 8.

Refitting:

- Mount bracket 8.
- Hold water pump with bracket 8 close to the supporting plate.
- Insert and tighten screw 7.
- Insert the lower red flat plug 5 onto the water pump.
- Fit silicone tubes 3 and 4.
- Lay the steam ironer face-up on the floor (fig. 22).
- Fit cover plate 2 and secure it with screws 1.
- Set up the steam ironer in a working position.
- Carry out a check to ensure that the steam ironer operates properly.

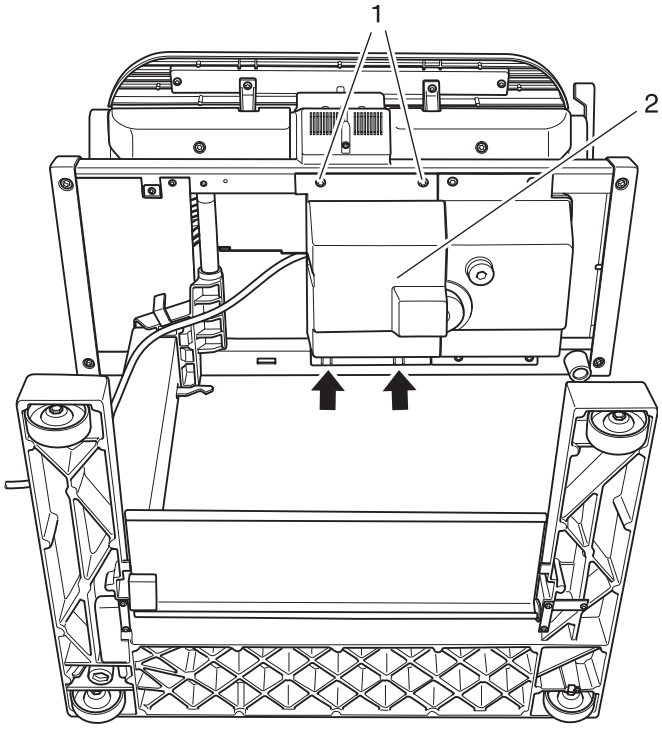

Fig. 22

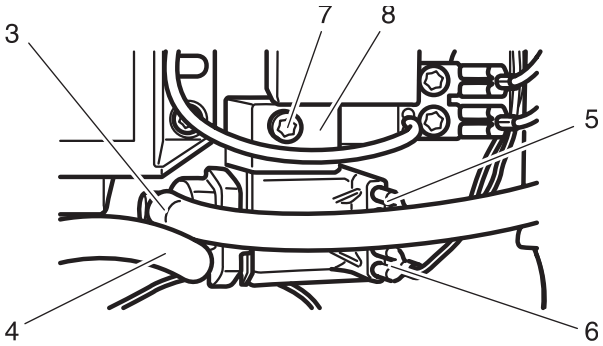

Fig. 22a

23. Replacing the relay

Removing:

- Disconnect the steam ironer's mains plug.
- Set up the steam ironer in a working position.
- Lay the steam ironer face-up on the floor (fig. 23).
- Remove screws 1 from the cover plate 2.
- Remove cover plate 2.
- Remove cable sleeve 3.
- Set up the steam ironer in a working position.
- Tilt the steam ironer over.
- Disconnect plugs (flat plugs) from the relay as shown in fig. 23a.
- Remove screw 4.
- Remove the relay.

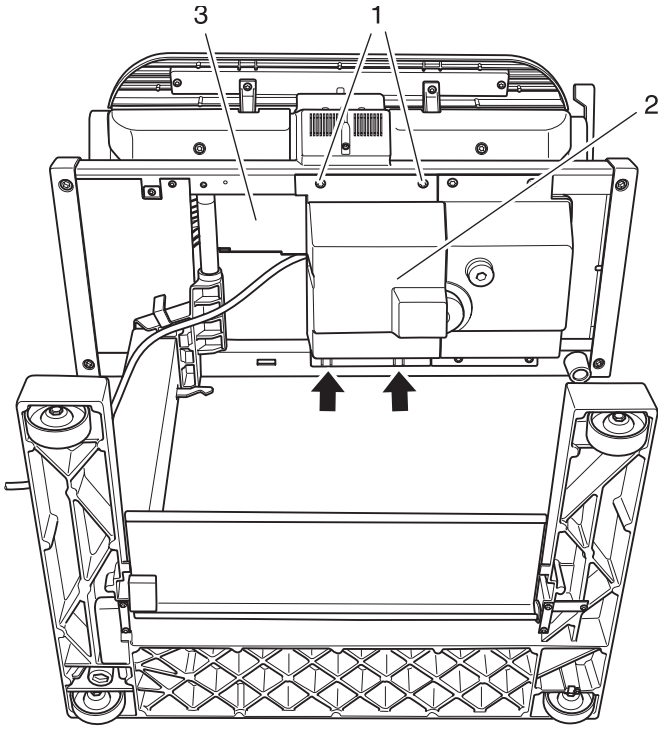

Fig. 23

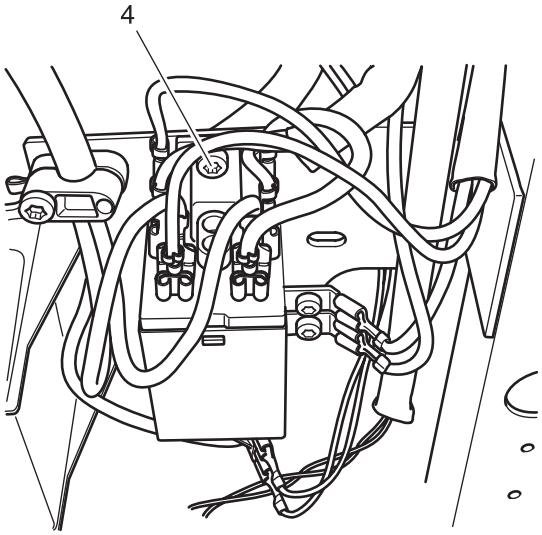

Fig. 23a

Refitting:

- Hold the relay close to the supporting plate.
- Insert and tighten screw 4.

Important:
The flat plugs of the wires must be replaced in the correct order on the relay sockets. Make sure you don't confuse them (see fig. 23b).

Following chart shows the correct order of the flat plugs on the sockets.

- Insert flat plugs onto the relay and run the wires.

Socket	Wire color	Wire section	Description
1	blue	0,5²	flat plug
2	black	1,5²	flat plug
3	brown	1,5²	flat plug with sleeve
4	black	0,5²	flat plug
5	black	1,5²	flat plug (bridge)
6	blue	1,5²	flat plug
7	blue	1,5²	flat plug with sleeve
8	black	1,5²	flat plug (bridge)

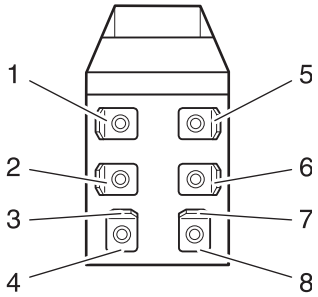

Fig. 23b

- Fit cable sleeve 3.
- Lay the steam ironer face-up on the floor (fig. 23).
- Fit cover plate 2 and secure it with screws 1.
- Set up the steam ironer in a working position.
- Carry out a check to ensure that the steam ironer operates properly.

24. Replacing the transformer

Removing:

- Disconnect the steam ironer's mains plug.
- Set up the steam ironer in a working position.
- Lay the steam ironer face-up on the floor (fig. 24).
- Remove screws 1 from the cover plate 2.
- Remove cover plate 2.
- Remove cable sleeve 3.

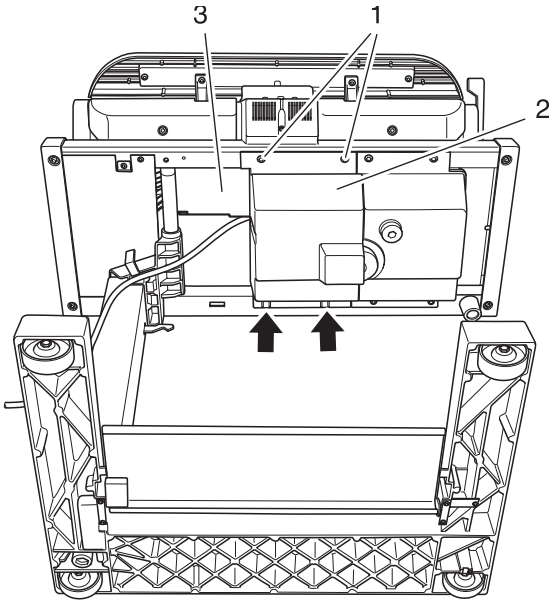

Fig. 24

- Set up the steam ironer in a working position.
- Tilt the steam ironer over.
- Remove screws 4 from the cover plate (fig. 24a).
- Remove cover plate.

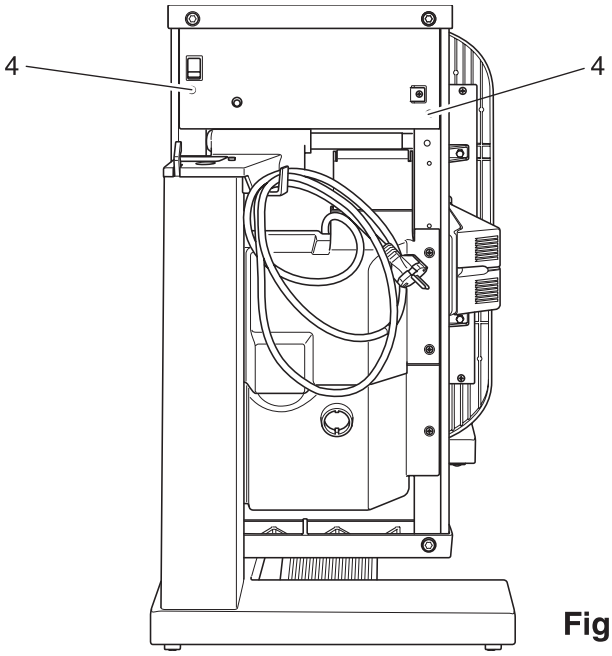

Fig. 24a

- Lift the catches of the connector plugs only 1-2 mm.
- Disconnect plugs shown in fig. 24b (connector plugs) from the circuit board.

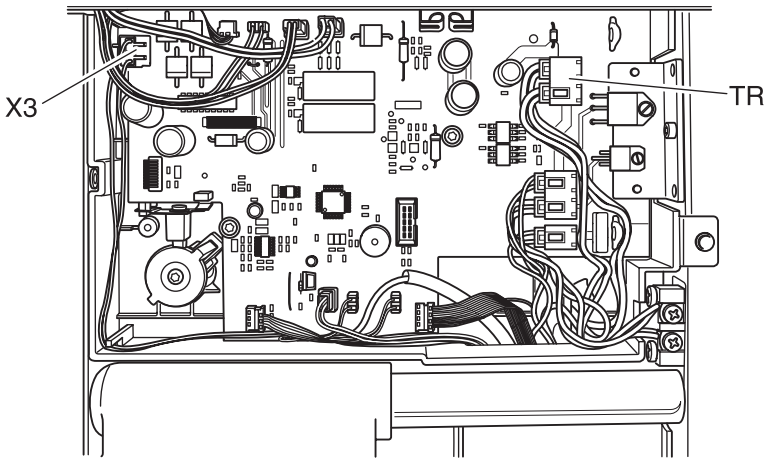

Fig. 24b

- Disconnect carefully both wire branches 1 and 5 by pulling them downwards.
- Remove screws 6 (fig. 24c).
- Remove the transformer.

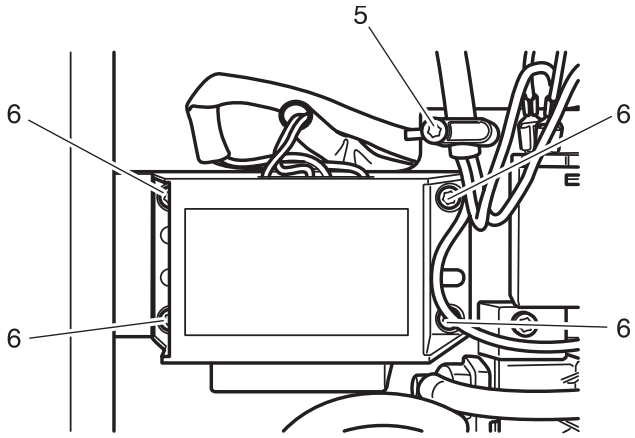

Fig. 24c

Refitting:

- Hold the transformer close to the supporting plate.
- Insert and tighten screws 6.
- Carefully place both wire branches behind the supporting plate and on the left of the strain relief.

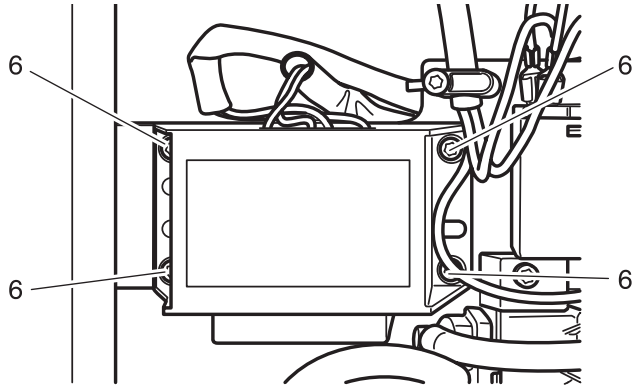

Fig. 24d

Important:
The connector plugs of the wire branches 1 and 5 must be replaced in the correct order on the circuit board.
Make sure you do not confuse them (see fig. 24e).

Wire branch 1
composed of 3 wires in the colors **black, blue, brown**
Socket / TR = transformer

Wire branch 5
composed of 2 wires in the color **black**
Socket / X3 = transformer

- Connect the connector plugs onto the circuit board and run the wires in the connection box.
- Lay the steam ironer face-up on the floor (fig. 24).
- Fit cable sleeve 3.
- Place cover.
- Insert and tighten screws 4 of the cover plate.
- Fit cover plate 2 and secure it with screws 1.
- Set up the steam ironer in a working position.
- Carry out a check to ensure that the steam ironer operates properly.

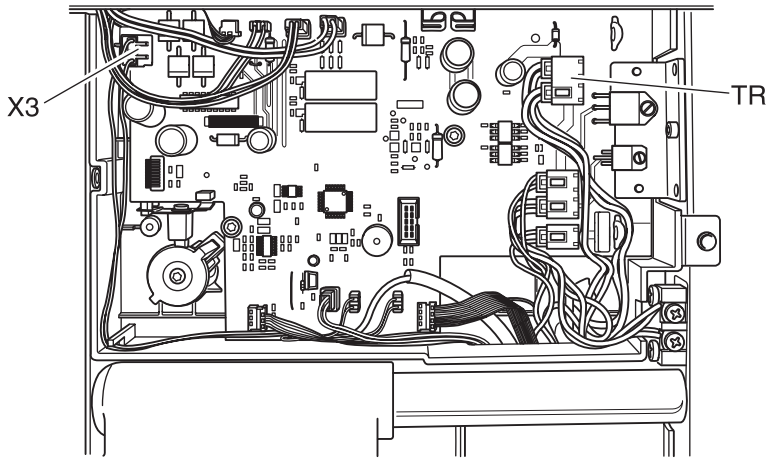

Fig. 24e

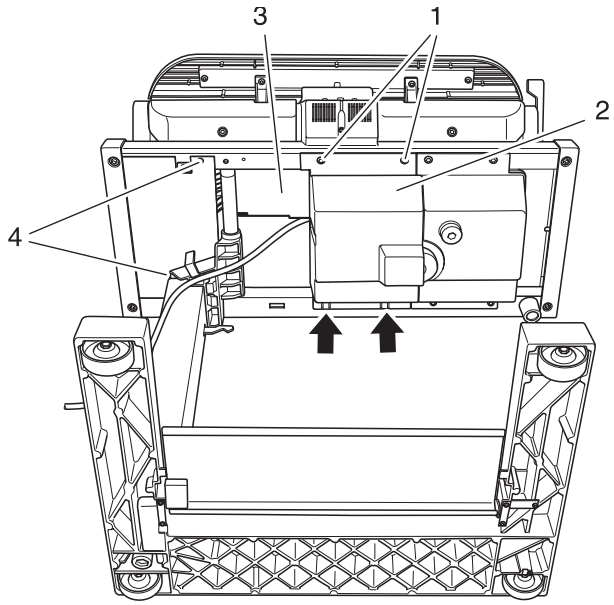

Fig. 24f

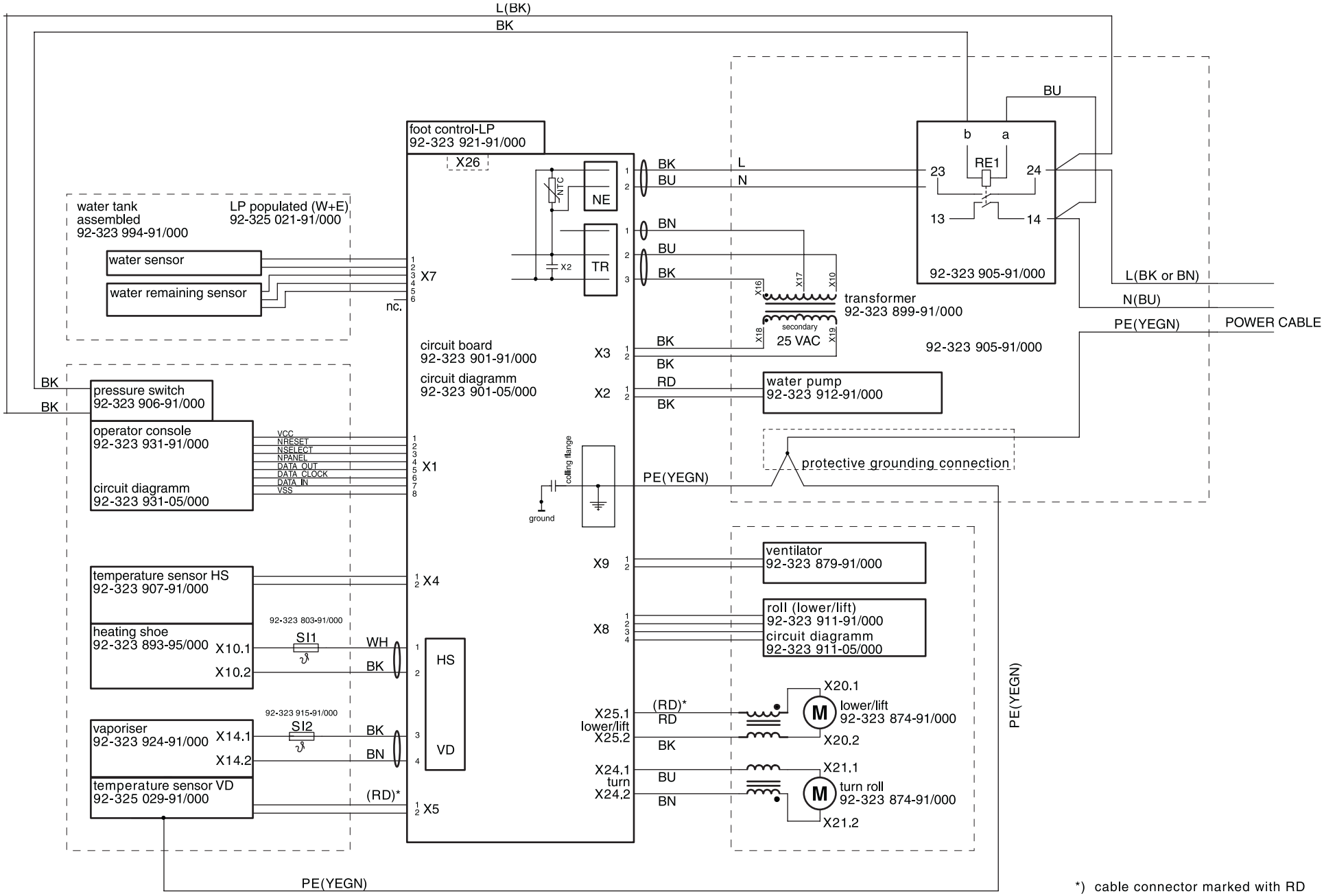

*) cable connector marked with RD

Notes:

26. Test program

The test program provides the mechanic with a simple and quick means of checking the appliance.
Sequential faults are not detected.
Tests of electronic components are performed with the control panel keys.
Each test program can be directly accessed.
The program can be stopped any time by switching the appliance off.
Each test requires a visual check.

Start of each test program:

- Switch off master switch.
- While pressing the „synthetics“ key, switch on master switch.
- The test mode is indicated by the flashing green LED 11 fig. 26 („appliance ON“)
- This LED flashes during the whole test.
- By pressing the selected key again (here: „synthetics key“), you can exit the test.
- By operating the heating-level keys you can select a test program for each component/unit of the steam ironer as below (fig. 26):

key to be actuated	for testing following components
„Linen“	Keyboard
„Cotton“	Pedal sensors
„Wool“	Raising/lowering and sychronizer
„Silk“	Roller motor (rotation)
„Synthetics“	Steam and heating unit

- After exiting the test, you can start it again by **operating the heating-level keys**.
- If a message is displayed that doesn’t belong to the test program, please refer to the troubleshooting chart on page 62.

Please note:
No special test for the roller ventilator is provided. Just perform an acoustic check.

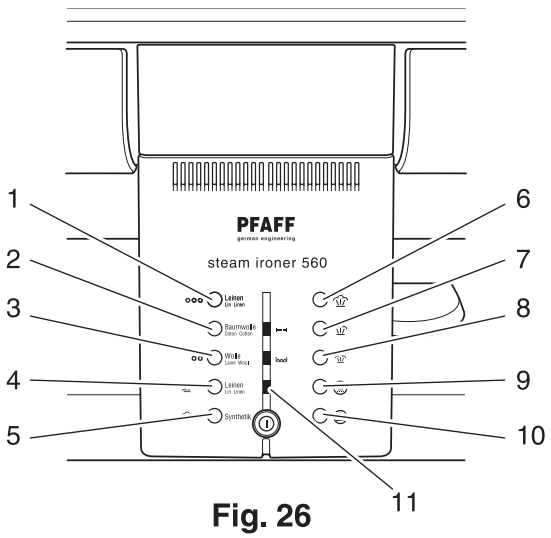

Fig. 26

Test program for steam ironer 560/580

Functions	Visual check / operation on steam ironer	Indicator elements on control panel Red keys / blue keys	Remarks
	Set up steam ironer in working position.Plug steam ironer into mains supply. Press „synthetics“ and master key	All indicator elements flash	Without water! Test starts!
LED test	All LED’s flash a few secs	LED’s flash 8 times	Green LED flashes during the whole test
	Master switch and green LED flash		End of LED test
Key test	Press „linen“ key	**„Linen“** key lights up	Each key must be actuated within a time span of 10 secs.
	Press „linen“ key	**„Cotton“** key lights up	Each key must be actuated within a time span of 10 sec. If the key is defective, repeat the test or replace the keyboard
	Press „cotton“ key	**„Wool“** key lights up	
	Press „wool“ key	**„Silk“** key lights up	
	Press „silk“ key	**„Synthetics“** key lights up	
	Press „synthetics“ key	**„Steam output max“** key lights up	
	Press „steam output max.“ key	**„Steam output med.“** key lights up	
	Press „steam output med.“ key	**„Steam output min.“** key lights up	
	Press „steam output min.“ key	**„Steam on request“** key lights up	
	Press „steam on request“ key	**„Continuous steam“** key lights up	
	Press „Continuous steam“ key	No key lights	End of Key test
	Master switch and green LED flash		
Pedal-sensor test	Press „cotton“ key	**„Cotton“** key lights up	If the pedal bar is not operated, the blue LED’s don’t light
	Slowly operate pedal bar as far as it will go, then release it	The **blue keys** on the right show the test status, depending on the pedal-bar position	Function check with LED’s
		„Cotton“ key lights up	
	Press „cotton“ key	No key lights	End of Pedal-sensor test
	Master switch and green LED flash		

Functions	Visual check / operation on steam ironer	Indicator elements on control panel Red keys / blue keys	Remarks
Raising/ Lowering and Synchronizer test	Press „wool“ key	**„Wool“** and **„steam output max.“** key light up	Each key must be actuated within a time span of 10 secs. Synchronizer sensors are indicated on the right
	Press „steam output med.“ key	Roller is lowered. **„Steam output med.“** key lights up	
	Press „steam output max.“ key	Roller is raised. **„Steam output max.“** key lights up	
	Press „wool“ key	No key lights	End of Raising/ Lowering test
	Master switch and green LED flash		
Roller test	Press „silk“ key	**„Silk“** key lights up	Function check with LED’s
	Press „steam output max.“ key	Roller turns forwards. **„Steam output max.“** key lights up	
	Press „steam output med.“ key	Roller turns backwards. **„Steam output med.“** key lights up	
	Press „steam output med.“ key	Roller stops. **„Steam output med.“** key goes out **„Silk“** key lights up	
	Press „silk“ key	No key lights	End of Roller test
	Master switch and green LED flash		
Water hardness test	Remove water tank seal Fit original float and tank seal Remove antiliming cartridge Fill 0,1 liter water		Perform test with a water hardness of approx. 1,25 mmol/l
	Press „synthetics“ key	**„Silk“**, **„water level“** and **„antiliming cartridge“** keys light up	„Steam output max“ key lights up as soon as working temperature is reached
		„Steam output max.“ key flashes	
	Fit antiliming cartridge Wait until key „Steam output max.“ lights up		

Functions	Visual check / operation on steam ironer	Indicator elements on control panel Red keys / blue keys	Remarks
Steam output test	Press „steam output max.“ key	Steam test starts **„Antiliming cartridge“** LED goes out after a few secs	The amount of water must evaporate after approx. 5 min
	„Steam output med.“, **„Synthetics“** and **„water level“** keys light up		If one heating-level key lights, the test is not ok. Refer to page 62.
	Master switch and green LED flash		End of Steam output test
Please note:	The water level test must be done in normal use of the steam ironer.		
Water level test	Remove water tank seal and place original float onto a suited torx screwdriver (TX 20) Insert original float in the cover-back as far as it will go, from the bottom	**„Water level“** LED key must go out	**Check without water!**
	Remove original float	**„Water level“** LED must light up	
	Press „synthetics“ key	No key lights	End of Water level test
	Master switch and green LED flash		

27. Troubleshooting chart for steam ironer 560/580

Fault during test	1st pt. to be replaced	2nd pt. to be replaced	3rd pt. to be replaced
LED's don't flash at test start	Control panel circuit board	Main circuit board	Connecting wire
Selected key doesn't light up during Key test	Control panel circuit board	Main circuit board	Connecting wire
Blue key for „steam output max." doesn't light up during Pedal-sensor test	Hall generator	Main circuit board	
Blue keys don't light up during Pedal-sensor test	Photoelectric barrier	Main circuit board	
„Steam output max." key doesn't light up during Raising/lowering test	Sensor circuit board	Main circuit board	Motor (turn roller)
Roller doesn't turn during Synchroniser test	Sensor circuit board	Main circuit board	Motor (turn roller)
Roller turns in the wrong direction during Synchroniser test	Main circuit board		
Red „linen" key lights up after end of steam test	Steam generator	Temperature fuse	
Red „cotton" key lights up after end of steam test	Water pump		
Red „wool" key lights up after end of steam test	Water level detection		
Red „silk" key lights up after end of steam test	Water hardness detection		

PFAFF

PFAFF GmbH
Amalienbadstraße 36
76227 Karlsruhe
Telefon + 49 (0)721/4001-0
Telefax + 49 (0)721/4001-513

E-Mail: info@pfaff.com
http://www.pfaff.de

Printed in Germany
Technische Änderungen vorbehalten
Subject to alterations in design

Sous toute réserve de modifications techniques

Salvo modificaciones técniche
Con riserva di modifiche tecniche
00152